The Timken Company
4500 Mt Pleasant St. NW
N. Canton, OH 44720
Phone: (234) 262-3000
E-Mail: CustomerCAD@timken.com • **Web site:** www.timken.com

Timken Part Number SNP-3056 x 10, SNW/SNP – Pull-Type Sleeve, Locknut, Lockwasher/Lockplate Assemblies

- The table below shows dimensions for adapter assemblies and components used in the mounting of tapered bore bearings on shafts.
- SNW assembly consists of a sleeve, locknut and lockwasher.
- SNP assembly consists of a sleeve, locknut and lockplate.



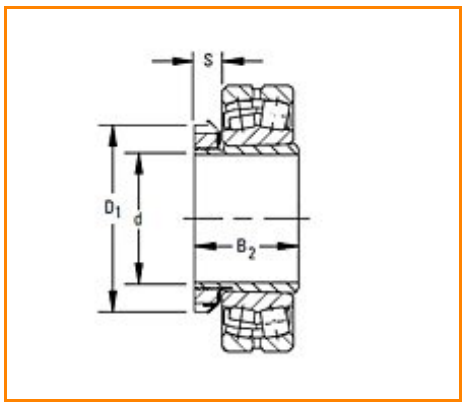

Specifications | Shaft Dimensions | Adapter Dimensions | Accessory Numbers

Specifications

Series	230K
Diameter d	10 in
Bearing Number	23056K
SNW/SNP Assembly Weight	45.40 lb

Shaft Dimensions

Tolerance[1]	-0.007 in

Adapter Dimensions

B_2	6 3/16 in
S^2	1 1/2 in
D_1	13 in

Accessory Numbers

Sleeve	S-3056 x 10.00
Locknut	N-056
Lockwasher and Lockplates	P-56

[1] Tolerance range is from +0 to value listed.
[2] Tolerance -0 to + 0.4 mm (-0 to +1/64 in)