The Timken Company
4500 Mt Pleasant St. NW
N. Canton, OH 44720
Phone: (234) 262-3000
E-Mail: CustomerCAD@timken.com • **Web site:** www.timken.com

Timken Part Number TCJT 1 1/4 S, Two-Bolt Flanged Units Eccentric Locking Collar (Includes Industrial and Standard Series)



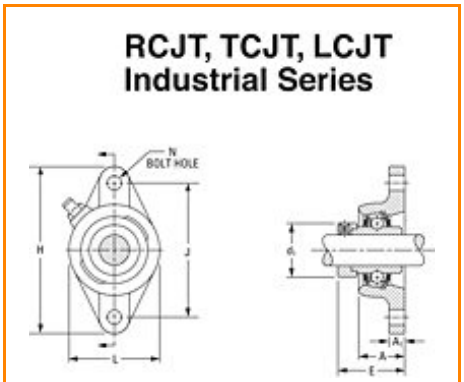

Specifications | Dimensions | Basic Load Ratings

Specifications

Bore Size d	1 1/4 in 31.8 mm
Bearing Number	G1103KPPB4
Dimension E	1.988 in 50.5 mm
Inside Ring Outside Diameter	1.720 in 43.7 mm
e	0.078 in 1.99 mm
Series	Industrial
Weight	2.403 lb 1.09 Kg

Seal Type	Tri-Ply Seal

Dimensions

Total Width A	29.9 mm 1.177 in
Total Length H	141.3 mm 5.563 in
Total Height L	79.4 mm 3.126 in
Bolt Hole Spacing J	116.7 mm 4.594 in
Bolt Hole Size N	11.5 mm 0.453 in
Flange Thickness A1	11.9 mm 0.469 in
Center of Bearing from Housing End A2	0.803 mm 0.032 in
Inside Ring Width B	0 mm 0.000 in

Basic Load Ratings

Static Load Rating	4900 lbf 21800 N
Dynamic Load Rating	2500 lbf 11100 N

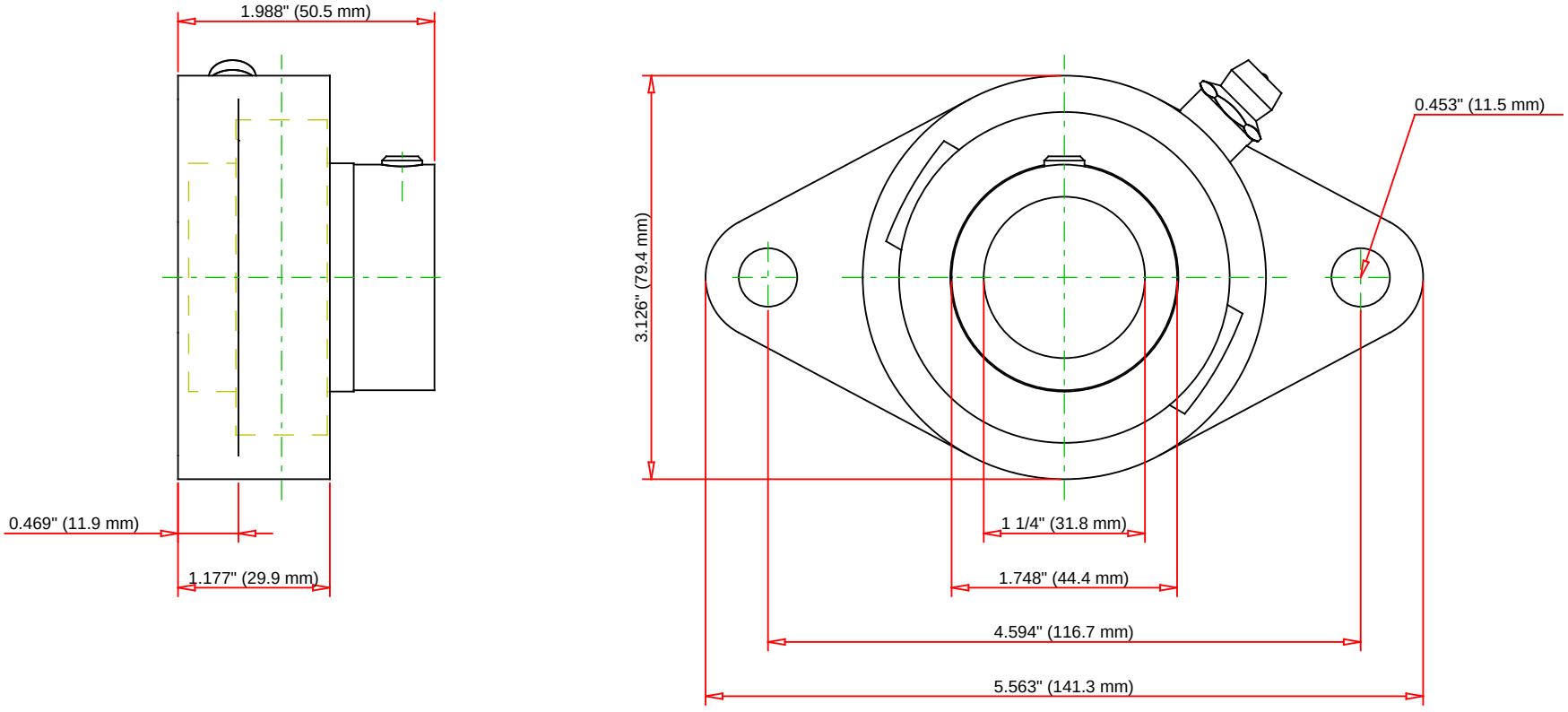

Bearing Number	G1103KPPB4			
Load Ratings - C_r	4900	lbf	21800	N
Load Ratings - C_{0r}	2500	lbf	11100	N
Weight	2.403	lb	1.09	kg

TIMKEN

THE TIMKEN COMPANY
NORTH CANTON, OHIO USA

TCJT 1 1/4 S

Two-Bolt Flanged Units Eccentric Locking Collar
(Includes Industrial and Standard Series)

Every reasonable effort has been made to ensure the accuracy of the information contained in this writing, but no liability is accepted for errors, omissions or for any other reason.

FOR DISCUSSION ONLY