The Timken Company
4500 Mt Pleasant St. NW
N. Canton, OH 44720
Phone: (234) 262-3000
E-Mail: CustomerCAD@timken.com • **Web site:** www.timken.com

Timken Part Number GN111KRRB, Fafnir® Eccentric Locking Collar Ball Bearings



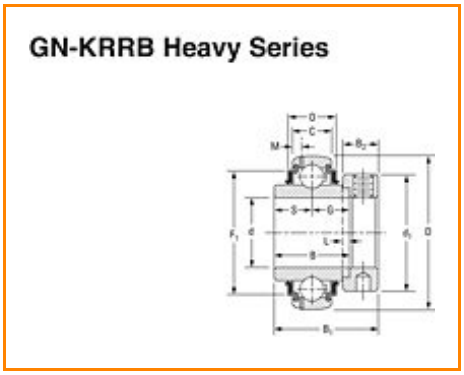

Specifications | Dimensions | Basic Load Ratings

Specifications

Bore Size d	1 11/16 in 42.9 mm
Bore Type	Cylindrical bore
Bearing Type	Ball Bearing
Seal Type	Shroud Seal
Material	Bearing Steel
Lubrication Type	Relubricatable
O.D. Type	Spherical OD
Dimension M	0.197 in 5 mm
Dimension B1	2.311 in 58.7 mm

Dimension B2	0.811 in 20.6 mm
Series	Medium-Duty
Weight	0.500 lb 0.200 Kg
Sub Series	GN..KRRB

Dimensions

Outside Diameter D	3.937 in 100.000 mm
Inside Ring Width B	42.86 mm 1.687 in
Outside Ring Width C	27.000 mm 1.063 in
Radius r	0.6 mm 0.024 in
Center of Bearing from End S	19.8 mm 0.780 in
Dimension S1	38.9 mm 1.531 in
Set Screw Size	3/8-16
Number of Set Screws	2
Angle between Set Screws	90 º

Basic Load Ratings

Static Load Rating	6700 lbf 30000 N

Dynamic Load Rating	13200 lbf 58500 N

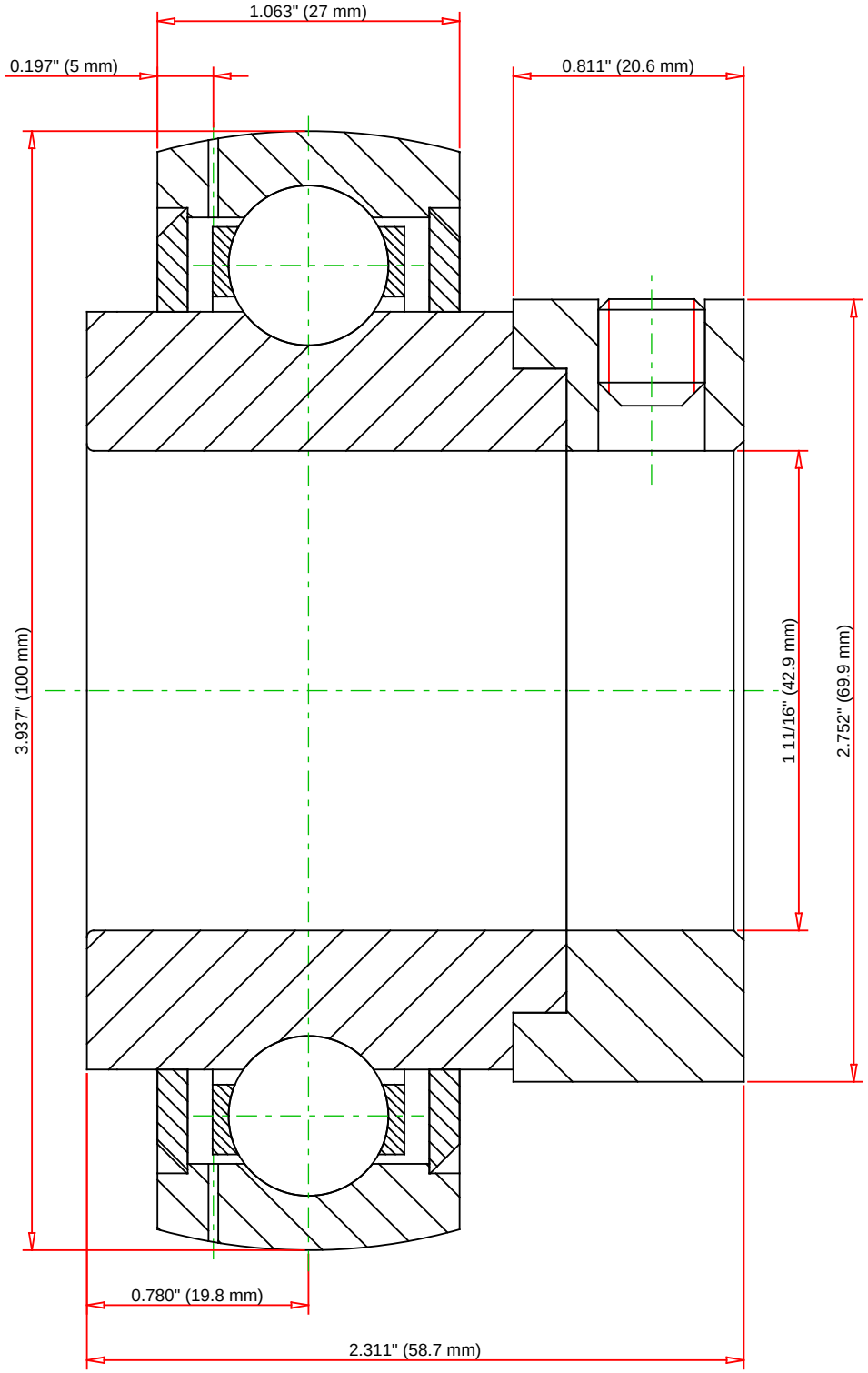

Weight	0.5 lb	0.2 kg

TIMKEN®

THE TIMKEN COMPANY
NORTH CANTON, OHIO USA

GN111KRRB

Fafnir® Eccentric Locking Collar Ball Bearings

Basic Load Ratings - C_r	13200 lbf	58500 N
Load Ratings - C_{0r}	6700 lbf	30000 N

Every reasonable effort has been made to ensure the accuracy of the information contained in this writing, but no liability is accepted for errors, omissions or for any other reason.

FOR DISCUSSION ONLY