The Timken Company
4500 Mt Pleasant St. NW
N. Canton, OH 44720
Phone: (234) 262-3000
E-Mail: CustomerCAD@timken.com • **Web site:** www.timken.com

Timken Part Number GYE35KRRB SGT, Fafnir® Setscrew Locking Ball Bearings



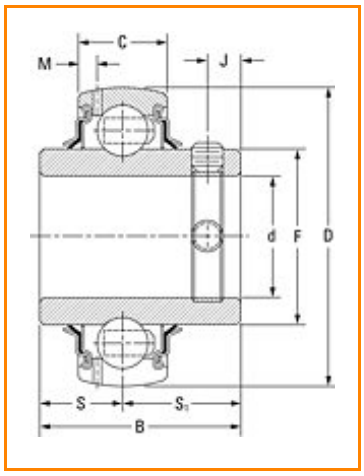

Specifications | Dimensions | Basic Load Ratings

Specifications

Bore Size d	1.378 in 35 mm
Bore Type	Cylindrical bore
Bearing Type	Ball Bearing
Seal Type	Shroud Seal
Material	Bearing Steel
Lubrication Type	Relubricatable
O.D. Type	Spherical OD
Dimension M	0.145 in 3.68 mm
Series	Industrial

Weight	0.500 lb 0.200 Kg
Sub Series	GYE..KRRB SGT

Dimensions

Outside Diameter D	2.835 in 72.000 mm
Inside Ring Width B	45.41 mm 1.788 in
Outside Ring Width C	19.000 mm 0.748 in
Radius r	0.6 mm 0.024 in
Center of Bearing from End S	17.48 mm 0.688 in
Dimension S1	27.94 mm 1.100 in
Set Screw Distance S2	10.36 mm 0.408 in
Set Screw Size	M8X1.25
Number of Set Screws	2
Angle between Set Screws	90 °

Basic Load Ratings

Static Load Rating	3400 lbf 15100 N
Dynamic Load Rating	6400 lbf 28500 N

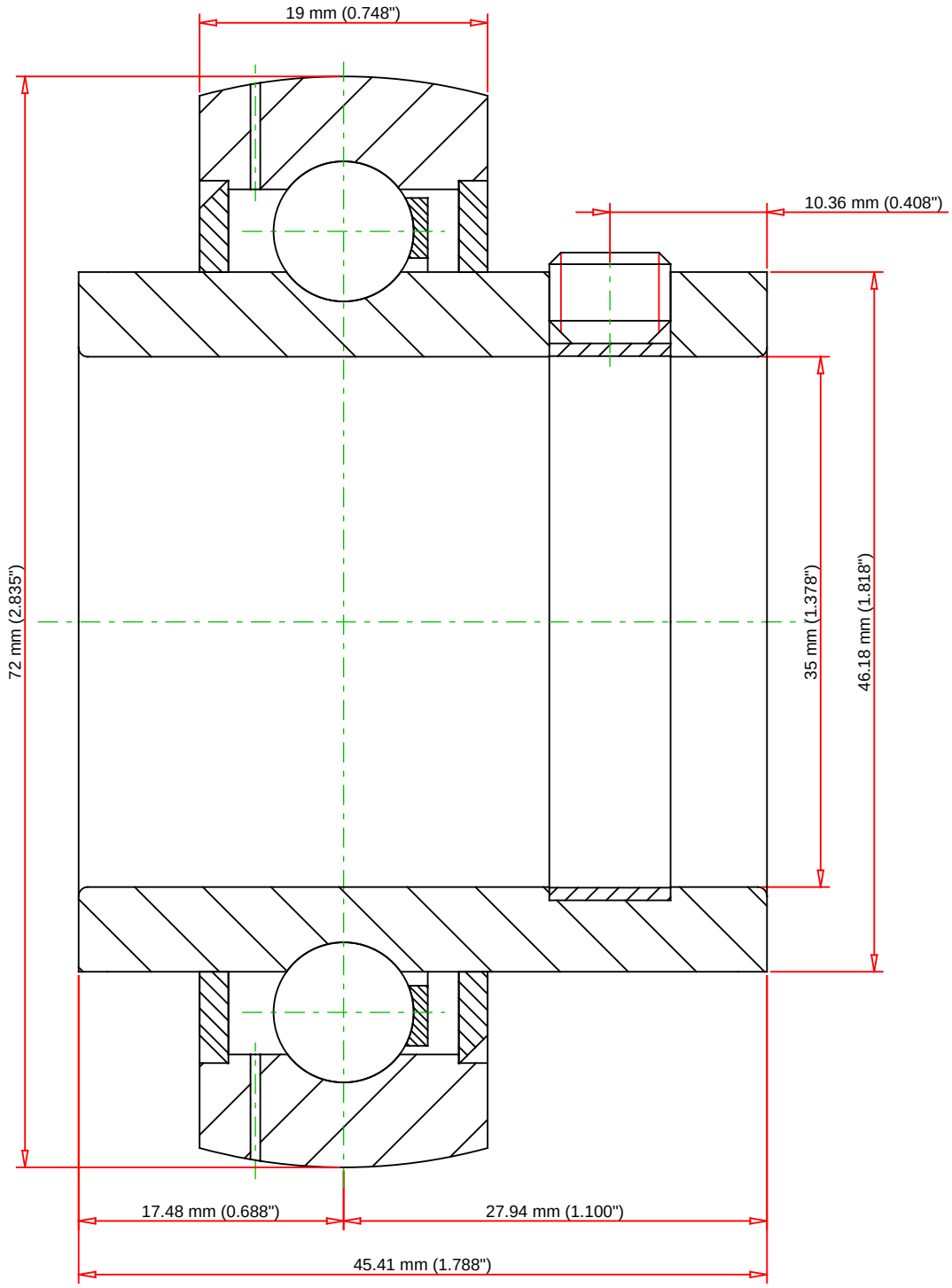

Weight	0.5 lb	0.2 kg

TIMKEN®

THE TIMKEN COMPANY
NORTH CANTON, OHIO USA

GYE35KRRB SGT

Fafnir® Setscrew Locking Ball Bearings

Basic Load Ratings - C_r	6400 lbf	28500 N
Load Ratings - C_{0r}	3400 lbf	15100 N

Every reasonable effort has been made to ensure the accuracy of the information contained in this writing, but no liability is accepted for errors, omissions or for any other reason.

FOR DISCUSSION ONLY