The Timken Company
4500 Mt Pleasant St. NW
N. Canton, OH 44720
Phone: (234) 262-3000
E-Mail: CustomerCAD@timken.com • **Web site:** www.timken.com

Timken Part Number 399A - 394A, Tapered Roller Bearings - TS (Tapered Single) Imperial

This is the most basic and most widely used type of tapered roller bearing. It consists of two main separable parts: the cone (inner ring) assembly and the cup (outer ring). It is typically mounted in opposing pairs on a shaft.



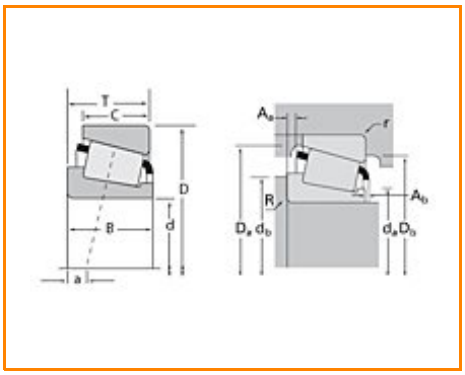

Specifications | Dimensions | Abutment and Fillet Dimensions | Basic Load Ratings | Factors

Specifications

Series	395
Cone Part Number	399A
Cup Part Number	394A
Design Units	Imperial
Bearing Weight	0.700 Kg 1.70 lb
Cage Type	Stamped Steel

Dimensions

d - Bore	68.263 mm 2.6875 in

D - Cup Outer Diameter	110.000 mm 4.3307 in
B - Cone Width	21.996 mm 0.8660 in
C - Cup Width	18.824 mm 0.7411 in
T - Bearing Width	21.999 mm 0.8661 in

Abutment and Fillet Dimensions

R - Cone Backface "To Clear" Radius[1]	2.290 mm 0.090 in
r - Cup Backface "To Clear" Radius[2]	1.27 mm 0.050 in
da - Cone Frontface Backing Diameter	73.91 mm 3.54 in
db - Cone Backface Backing Diameter	77.98 mm 3.07 in
Da - Cup Frontface Backing Diameter	105.40 mm 4.15 in
Db - Cup Backface Backing Diameter	101.09 mm 3.98 in
Ab - Cage-Cone Frontface Clearance	2.8 mm 0.11 in
Aa - Cage-Cone Backface Clearance	1.3 mm 0.05 in
a - Effective Center Location[3]	-0.8 mm -0.03 in

Basic Load Ratings

C90 - Dynamic Radial Rating (90 million revolutions)[4]	25600 N 5760 lbf
C1 - Dynamic Radial Rating (1 million revolutions)[5]	98900 N 22200 lbf
C0 - Static Radial Rating	125000 N 28100 lbf
C_{a90} - Dynamic Thrust Rating (90 million revolutions)[6]	17600 N 3970 lbf

Factors

K - Factor[7]	1.45
e - ISO Factor[8]	0.40
Y - ISO Factor[9]	1.49
G1 - Heat Generation Factor (Roller-Raceway)	56
G2 - Heat Generation Factor (Rib-Roller End)	21.4
Cg - Geometry Factor	0.0984

[1] These maximum fillet radii will be cleared by the bearing corners.
[2] These maximum fillet radii will be cleared by the bearing corners.
[3] Negative value indicates effective center inside cone backface.
[4] Based on 90 x 10^6 revolutions L_{10} life, for The Timken Company life calculation method. C_{90} and C_{a90} are radial and thrust values.
[5] Based on 1 x 10^6 revolutions L_{10} life, for the ISO life calculation method.
[6] Based on 90 x 10^6 revolutions L_{10} life, for The Timken Company life calculation method. C_{90} and C_{a90} are radial and thrust values for a single-row, $C_{90(2)}$ is the two-row radial value.
[7] These factors apply for both inch and metric calculations. Consult your Timken representative for instruction on use.
[8] These factors apply for both inch and metric calculations. Consult your Timken representative for instruction on use.
[9] These factors apply for both inch and metric calculations. Consult your Timken representative for instruction on use.

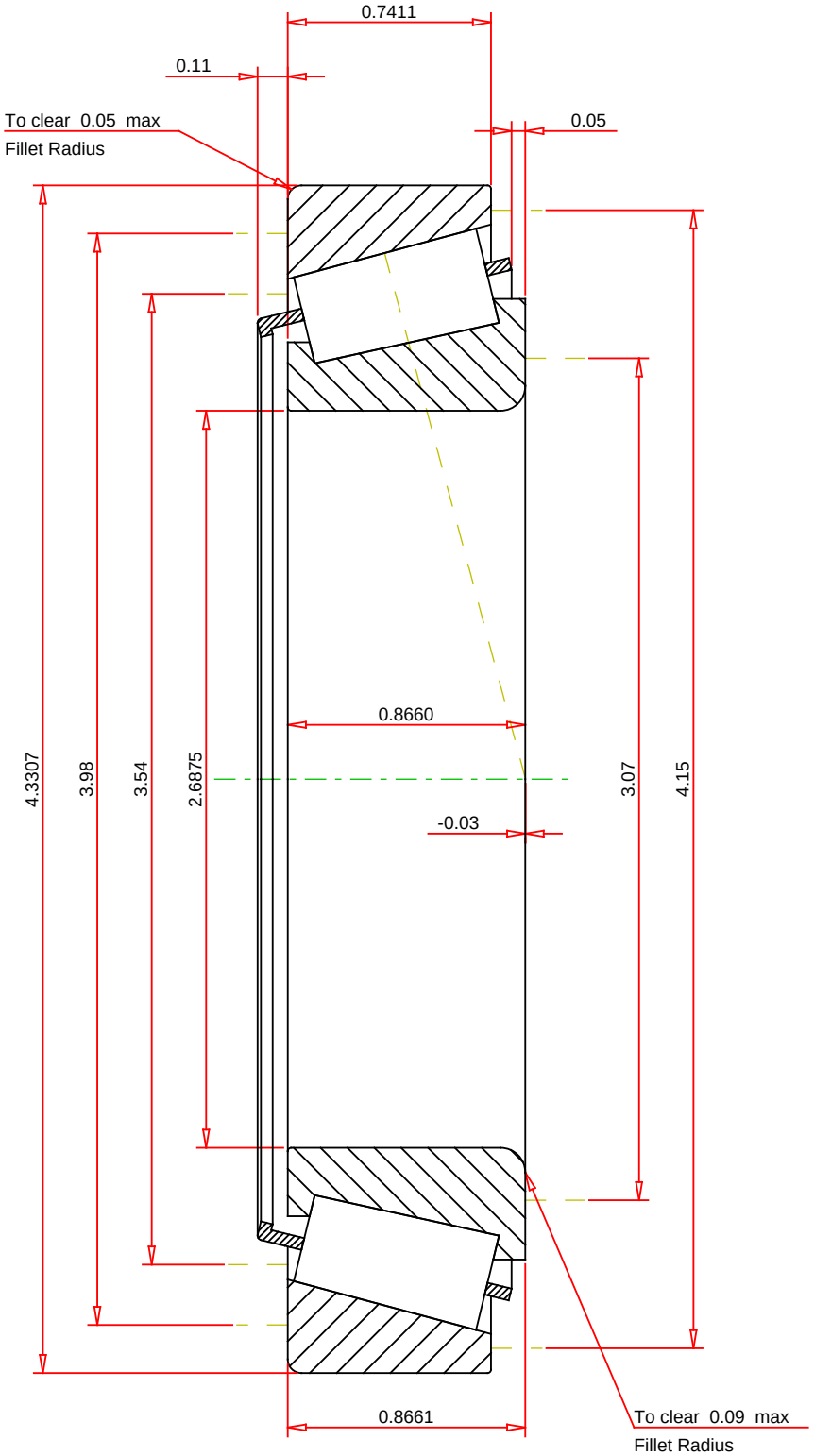

IMPERIAL UNITS

ISO Factor - e	0.4	
ISO Factor - Y	1.49	
Bearing Weight	1.7	lb
Number of Rollers Per Row	22	
Effective Center Location	-0.03	inch

TIMKEN®

THE TIMKEN COMPANY
NORTH CANTON, OHIO USA

399A - 394A
TS BEARING ASSEMBLY

K Factor	1.45	
Dynamic Radial Rating - C90	25600	lbf
Dynamic Thrust Rating - Ca90	17600	lbf
Static Radial Rating - C0	125000	lbf
Dynamic Radial Rating - C1	98900	lbf

Every reasonable effort has been made to ensure the accuracy of the information contained in this writing, but no liability is accepted for errors, omissions or for any other reason.

FOR DISCUSSION ONLY