**The Timken Company**
4500 Mt Pleasant St. NW
N. Canton, OH 44720
**Phone:** (234) 262-3000
**E-Mail:** CustomerCAD@timken.com • **Web site:** www.timken.com

# Timken Part Number 26112 - 26283, Tapered Roller Bearings - TS (Tapered Single) Imperial

This is the most basic and most widely used type of tapered roller bearing. It consists of two main separable parts: the cone (inner ring) assembly and the cup (outer ring). It is typically mounted in opposing pairs on a shaft.



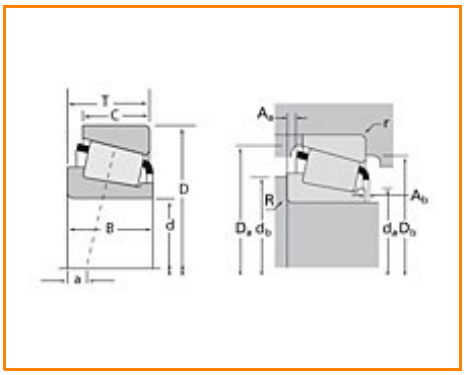


Specifications | Dimensions | Abutment and Fillet Dimensions | Basic Load Ratings | Factors

## Specifications

| | |
|---|---|
| **Series** | 26000 |
| **Cone Part Number** | 26112 |
| **Cup Part Number** | 26283 |
| **Design Units** | Imperial |
| **Bearing Weight** | 0.400 Kg<br>0.90 lb |
| **Cage Type** | Stamped Steel |

## Dimensions

| | |
|---|---|
| **d - Bore** | 28.575 mm<br>1.1250 in |

| | |
|---|---|
| **D - Cup Outer Diameter** | 71.999 mm<br>2.8346 in |
| **B - Cone Width** | 18.923 mm<br>0.7450 in |
| **C - Cup Width** | 15.875 mm<br>0.6250 in |
| **T - Bearing Width** | 18.999 mm<br>0.7480 in |

## Abutment and Fillet Dimensions

| | |
|---|---|
| **R - Cone Backface "To Clear" Radius[1]** | 1.520 mm<br>0.06 in |
| **r - Cup Backface "To Clear" Radius[2]** | 1.52 mm<br>0.06 in |
| **da - Cone Frontface Backing Diameter** | 35.05 mm<br>1.38 in |
| **db - Cone Backface Backing Diameter** | 37.08 mm<br>1.46 in |
| **Da - Cup Frontface Backing Diameter** | 66.00 mm<br>2.60 in |
| **Db - Cup Backface Backing Diameter** | 61.98 mm<br>2.44 in |
| **Ab - Cage-Cone Frontface Clearance** | 2.3 mm<br>0.09 in |
| **Aa - Cage-Cone Backface Clearance** | 0 mm<br>0 in |
| **a - Effective Center Location[3]** | -4.10 mm<br>-0.16 in |

## Basic Load Ratings

| | |
|---|---|
| **C90 - Dynamic Radial Rating (90 million revolutions)[4]** | 18100 N<br>4060 lbf |
| **C1 - Dynamic Radial Rating (1 million revolutions)[5]** | 69600 N<br>15700 lbf |
| **C0 - Static Radial Rating** | 60100 N<br>13500 lbf |
| **$C_{a90}$ - Dynamic Thrust Rating (90 million revolutions)[6]** | 11100 N<br>2500 lbf |

## Factors

| | |
|---|---|
| **K - Factor[7]** | 1.62 |
| **e - ISO Factor[8]** | 0.36 |
| **Y - ISO Factor[9]** | 1.67 |
| **G1 - Heat Generation Factor (Roller-Raceway)** | 16.1 |
| **G2 - Heat Generation Factor (Rib-Roller End)** | 10.1 |
| **Cg - Geometry Factor** | 0.063 |

[1] These maximum fillet radii will be cleared by the bearing corners.
[2] These maximum fillet radii will be cleared by the bearing corners.
[3] Negative value indicates effective center inside cone backface.
[4] Based on 90 x $10^6$ revolutions $L_{10}$ life, for The Timken Company life calculation method. $C_{90}$ and $C_{a90}$ are radial and thrust values.
[5] Based on 1 x $10^6$ revolutions $L_{10}$ life, for the ISO life calculation method.
[6] Based on 90 x $10^6$ revolutions $L_{10}$ life, for The Timken Company life calculation method. $C_{90}$ and $C_{a90}$ are radial and thrust values for a single-row, $C_{90(2)}$ is the two-row radial value.
[7] These factors apply for both inch and metric calculations. Consult your Timken representative for instruction on use.
[8] These factors apply for both inch and metric calculations. Consult your Timken representative for instruction on use.
[9] These factors apply for both inch and metric calculations. Consult your Timken representative for instruction on use.

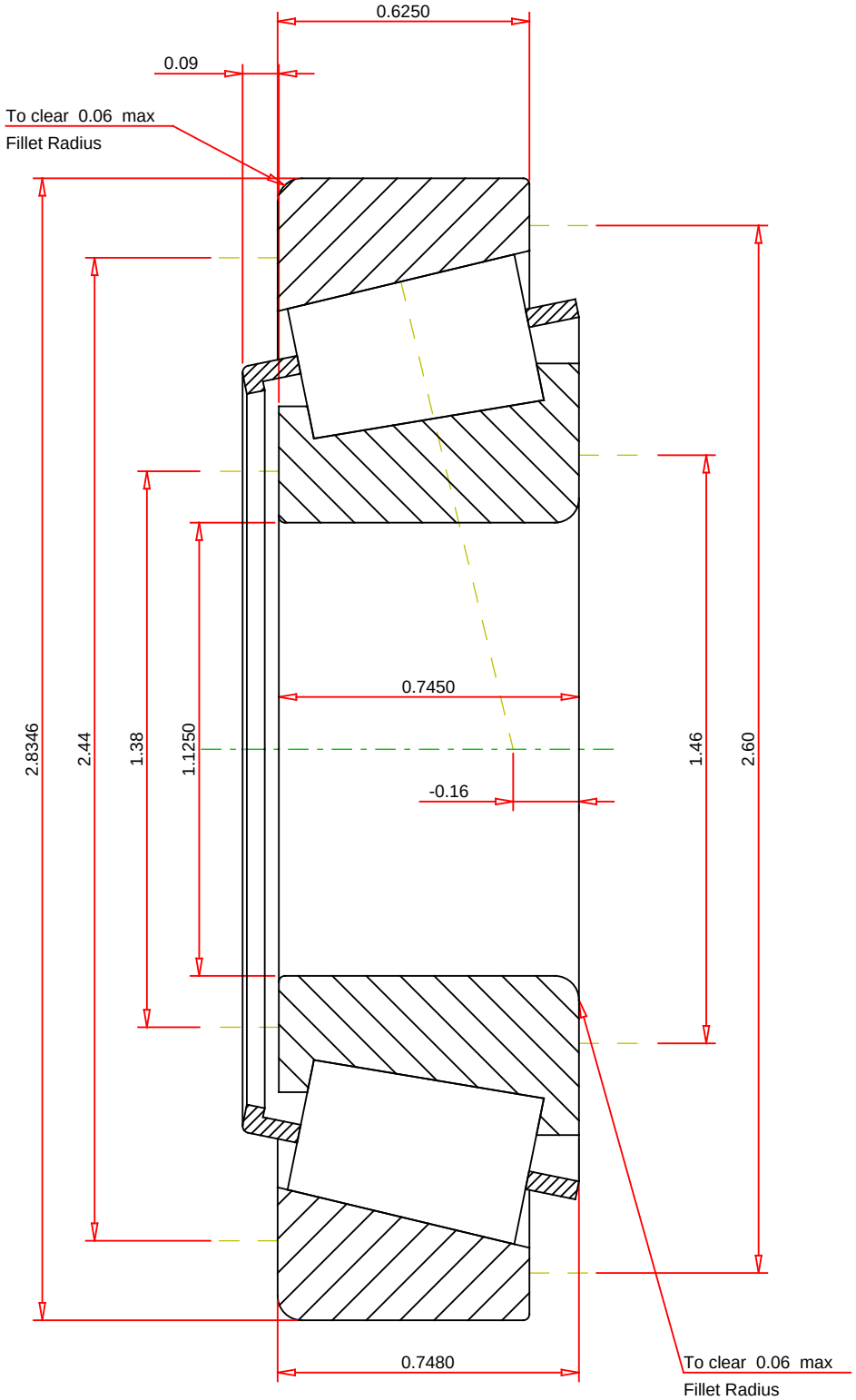


IMPERIAL UNITS

| | | |
|---|---|---|
| ISO Factor - e | 0.36 | |
| ISO Factor - Y | 1.67 | |
| Bearing Weight | 0.9 | lb |
| Number of Rollers Per Row | 15 | |
| Effective Center Location | -0.16 | inch |

TIMKEN

THE TIMKEN COMPANY
NORTH CANTON, OHIO USA

26112 - 26283
TS BEARING ASSEMBLY

| | | |
|---|---|---|
| K Factor | 1.62 | |
| Dynamic Radial Rating - C90 | 18100 | lbf |
| Dynamic Thrust Rating - Ca90 | 11100 | lbf |
| Static Radial Rating - C0 | 60100 | lbf |
| Dynamic Radial Rating - C1 | 69600 | lbf |

Every reasonable effort has been made to ensure the accuracy of the information contained in this writing, but no liability is accepted for errors, omissions or for any other reason.

FOR DISCUSSION ONLY