The Timken Company
4500 Mt Pleasant St. NW
N. Canton, OH 44720
Phone: (234) 262-3000
E-Mail: CustomerCAD@timken.com • **Web site:** www.timken.com

Timken Part Number VCJT 1 3/4, Two-Bolt Flanged Units Eccentric Locking Collar (Includes Industrial and Standard Series)



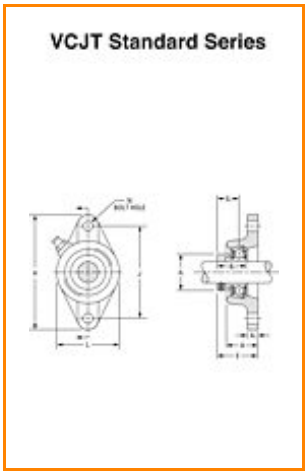

Specifications | Dimensions | Basic Load Ratings

Specifications

Bore Size d	1 3/4 in 44.5 mm
Bearing Number	GRA112RRB
Dimension E	2.244 in 57 mm
Inside Ring Outside Diameter	2.480 in 63 mm
Series	Standard
Weight	4.914 lb 2.229 Kg
Seal Type	Molded Shroud

Dimensions

Total Width A	38.9 mm 1.531 in
Total Length H	179.4 mm 7.063 in
Total Height L	111.1 mm 4.374 in
Bolt Hole Spacing J	148 mm 5.827 in
Bolt Hole Size N	13.1 mm 0.516 in
Flange Thickness A1	12.7 mm 0.500 in
Center of Bearing from Housing End A2	24.5 mm 0.965 in
Inside Ring Width B	43.7 mm 1.720 in
Center of Bearing from Bearing End S	24.5 mm 0.965 in

Basic Load Ratings

Static Load Rating	8200 lbf 36300 N
Dynamic Load Rating	4600 lbf 20500 N

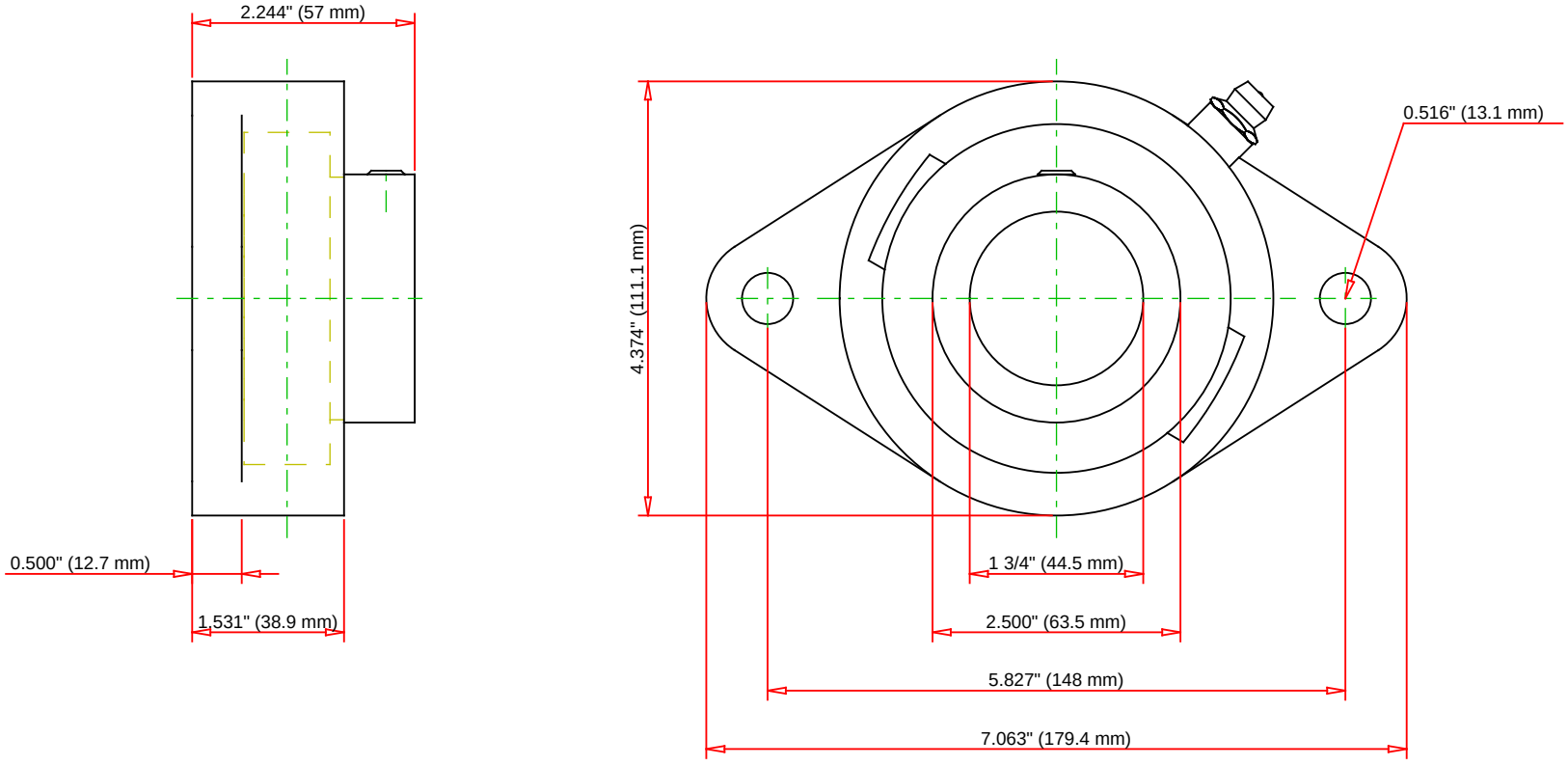

Bearing Number	GRA112RRB			
Load Ratings - C_r	8160	lbf	36300	N
Load Ratings - C_{0r}	4600	lbf	20500	N
Weight	4.914	lb	2.229	kg

TIMKEN

THE TIMKEN COMPANY
NORTH CANTON, OHIO USA

VCJT 1 3/4

Two-Bolt Flanged Units Eccentric Locking Collar
(Includes Industrial and Standard Series)

Every reasonable effort has been made to ensure the accuracy of the information contained in this writing, but no liability is accepted for errors, omissions or for any other reason.

FOR DISCUSSION ONLY