The Timken Company
4500 Mt Pleasant St. NW
N. Canton, OH 44720
Phone: (234) 262-3000
E-Mail: CustomerCAD@timken.com • **Web site:** www.timken.com

Timken Part Number 36686 - 36620, Tapered Roller Bearings - TS (Tapered Single) Imperial

This is the most basic and most widely used type of tapered roller bearing. It consists of two main separable parts: the cone (inner ring) assembly and the cup (outer ring). It is typically mounted in opposing pairs on a shaft.



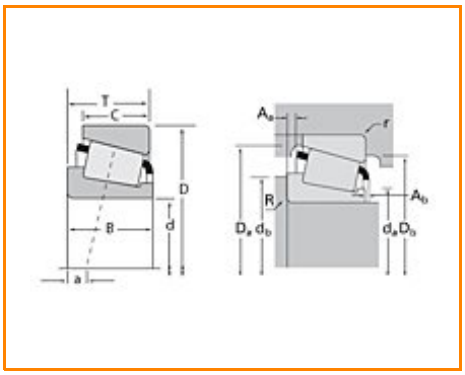

Specifications | Dimensions | Abutment and Fillet Dimensions | Basic Load Ratings | Factors

Specifications

Series	36600
Cone Part Number	36686
Cup Part Number	36620
Design Units	Imperial
Bearing Weight	2.400 Kg 5.30 lb
Cage Type	Stamped Steel

Dimensions

d - Bore	142.875 mm 5.625 in

D - Cup Outer Diameter	193.675 mm 7.6250 in
B - Cone Width	28.575 mm 1.1250 in
C - Cup Width	23.020 mm 0.9063 in
T - Bearing Width	28.575 mm 1.1250 in

Abutment and Fillet Dimensions

R - Cone Backface "To Clear" Radius[1]	1.520 mm 0.06 in
r - Cup Backface "To Clear" Radius[2]	1.52 mm 0.06 in
da - Cone Frontface Backing Diameter	150.88 mm 6.85 in
db - Cone Backface Backing Diameter	152.91 mm 6.02 in
Da - Cup Frontface Backing Diameter	188.00 mm 7.41 in
Db - Cup Backface Backing Diameter	182.12 mm 7.17 in
Ab - Cage-Cone Frontface Clearance	3.3 mm 0.13 in
Aa - Cage-Cone Backface Clearance	1 mm 0.04 in
a - Effective Center Location[3]	4.8 mm 0.19 in

Basic Load Ratings

C90 - Dynamic Radial Rating (90 million revolutions)[4]	50900 N 11400 lbf
C1 - Dynamic Radial Rating (1 million revolutions)[5]	196000 N 44200 lbf
C0 - Static Radial Rating	394000 N 88600 lbf
C_{a90} - Dynamic Thrust Rating (90 million revolutions)[6]	32100 N 7220 lbf

Factors

K - Factor[7]	1.59
e - ISO Factor[8]	0.37
Y - ISO Factor[9]	1.63
G1 - Heat Generation Factor (Roller-Raceway)	366
G2 - Heat Generation Factor (Rib-Roller End)	152
Cg - Geometry Factor	0.177

[1] These maximum fillet radii will be cleared by the bearing corners.
[2] These maximum fillet radii will be cleared by the bearing corners.
[3] Negative value indicates effective center inside cone backface.
[4] Based on 90 x 10^6 revolutions L_{10} life, for The Timken Company life calculation method. C_{90} and C_{a90} are radial and thrust values.
[5] Based on 1 x 10^6 revolutions L_{10} life, for the ISO life calculation method.
[6] Based on 90 x 10^6 revolutions L_{10} life, for The Timken Company life calculation method. C_{90} and C_{a90} are radial and thrust values for a single-row, $C_{90(2)}$ is the two-row radial value.
[7] These factors apply for both inch and metric calculations. Consult your Timken representative for instruction on use.
[8] These factors apply for both inch and metric calculations. Consult your Timken representative for instruction on use.
[9] These factors apply for both inch and metric calculations. Consult your Timken representative for instruction on use.

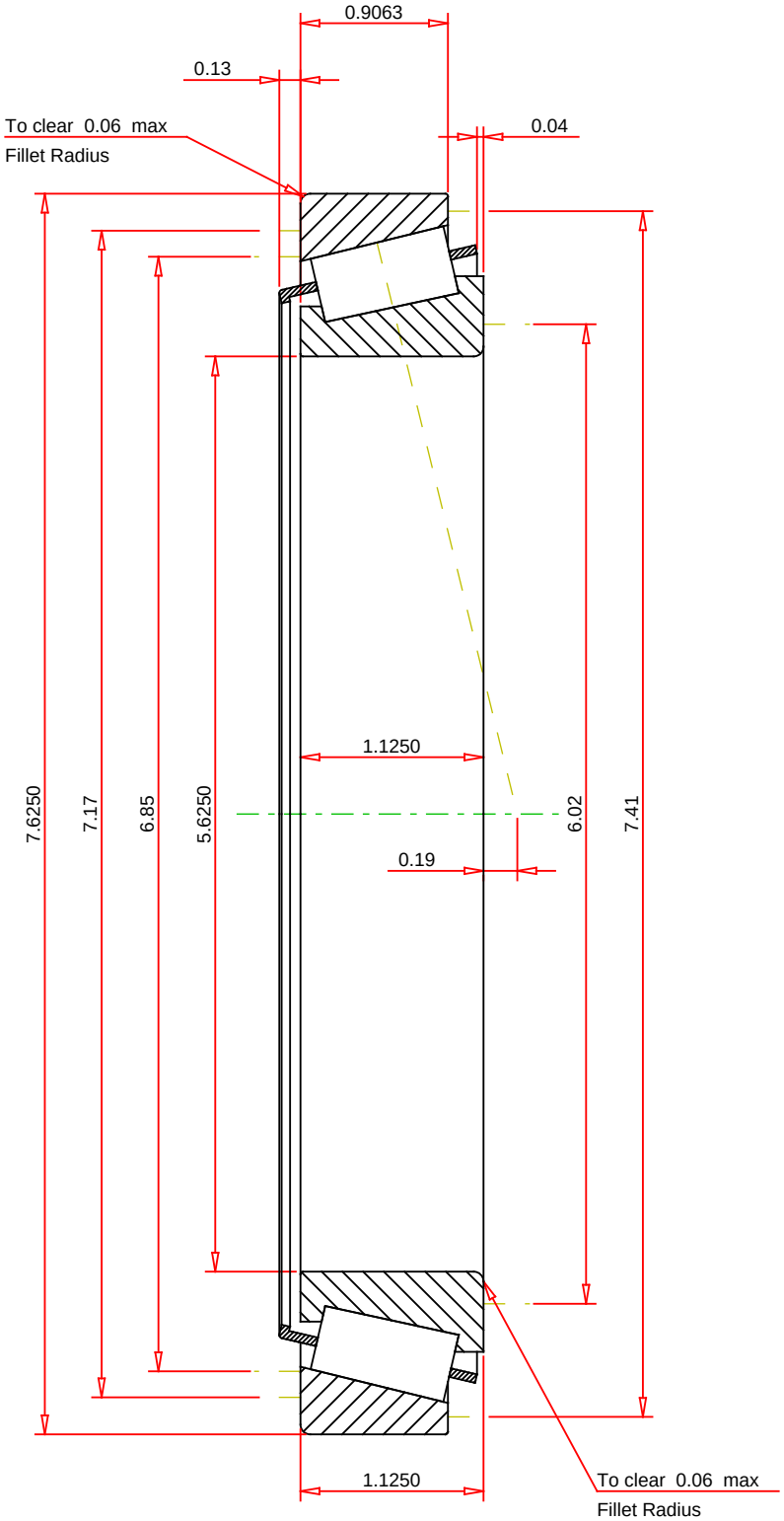

IMPERIAL UNITS

ISO Factor - e	0.37	
ISO Factor - Y	1.63	
Bearing Weight	5.3	lb
Number of Rollers Per Row	43	
Effective Center Location	0.19	inch

TIMKEN

THE TIMKEN COMPANY
NORTH CANTON, OHIO USA

36686 - 36620
TS BEARING ASSEMBLY

K Factor	1.59	
Dynamic Radial Rating - C90	50900	lbf
Dynamic Thrust Rating - Ca90	32100	lbf
Static Radial Rating - C0	394000	lbf
Dynamic Radial Rating - C1	196000	lbf

Every reasonable effort has been made to ensure the accuracy of the information contained in this writing, but no liability is accepted for errors, omissions or for any other reason.

FOR DISCUSSION ONLY