The Timken Company
4500 Mt Pleasant St. NW
N. Canton, OH 44720
Phone: (234) 262-3000
E-Mail: CustomerCAD@timken.com • **Web site:** www.timken.com

Timken Part Number RAKH 1 7/16, Pillow Block Units Eccentric Locking Collar (Includes Industrial and Standard Series)



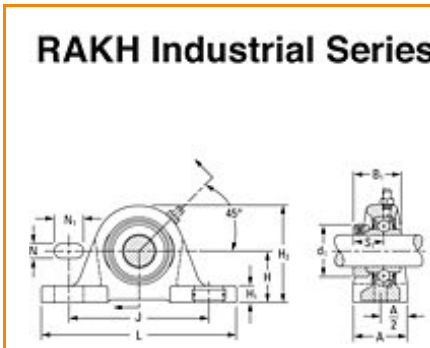

Specifications | Dimensions | Basic Load Ratings

Specifications

Bore Size d	1 7/16 in 36.5 mm
Bearing Number	G1107KRRB
Inside Ring Outside Diameter	0.673 in 17.1 mm
Dimension B1	2.016 in 51.2 mm
Dimension T	1.126 in 28.6 mm
Series	Industrial
Weight	6.426 lb 2.915 Kg
Seal Type	Shroud Seal

Dimensions

Shaft Height H	53.98 mm 2.125 in
Total Length L	203.2 mm 8.000 in
Total Width A	2.252 in 57.2 mm
Bolt Hole Spacing J	144.5 mm 5.689 in
Bolt Hole Width N	14.3 mm 0.563 in
Bolt Hole Length N1	30.2 mm 1.189 in
Base Height H1	19 mm 0.748 in
Total Height H2	101.6 mm 4.000 in
Dimension L1	67.7 mm 2.665 in
Inside Ring Width B	N/A
Center of Bearing from End S	18.7 mm 0.736 in

Basic Load Ratings

Static Load Rating	3400 lbf 15100 N
Dynamic Load Rating	6400 lbf 28500 N

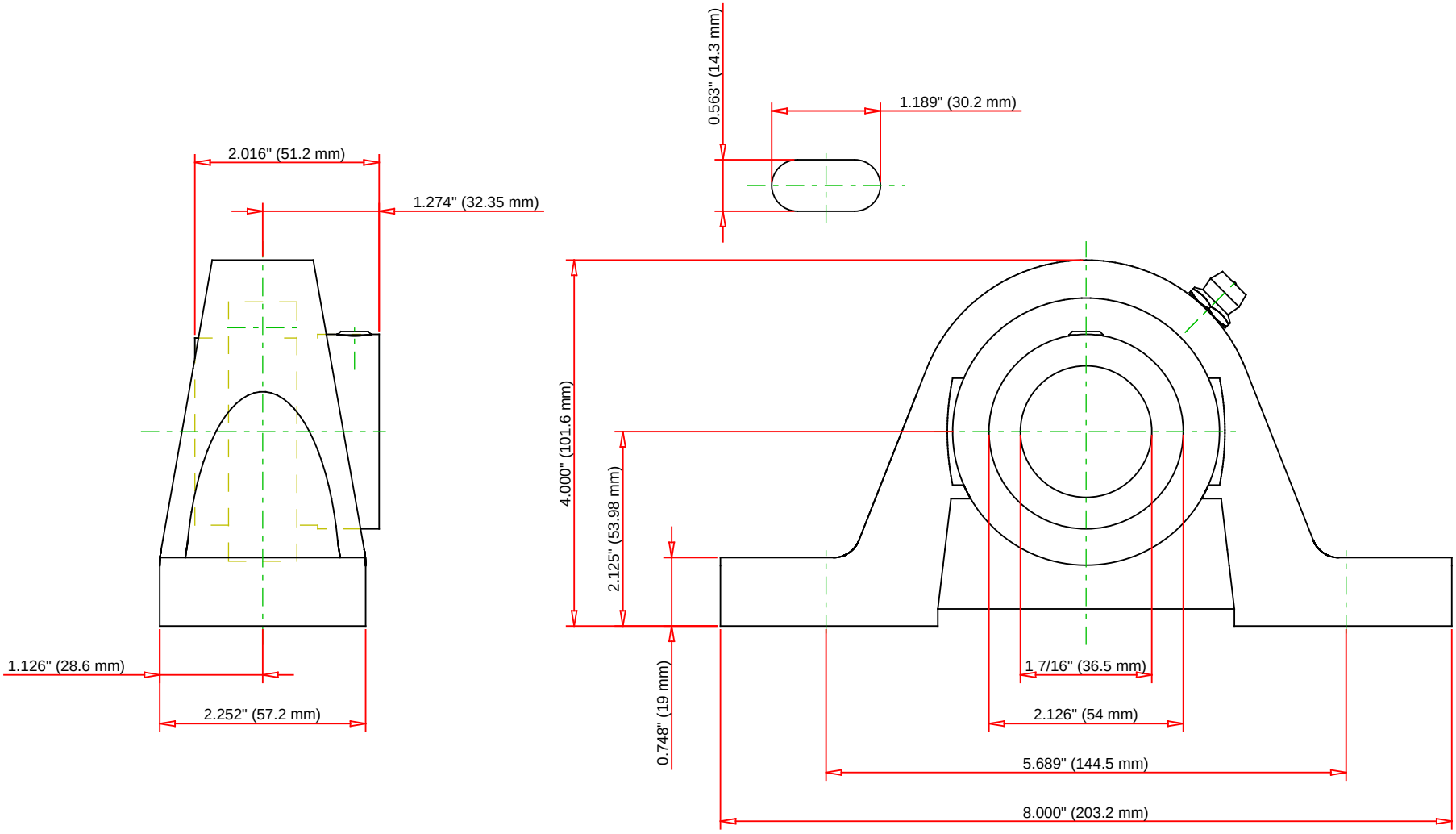

Bearing Number	G1107KRRB			
Load Ratings - C_r	6400	lbf	28500	N
Load Ratings - C_{0r}	3400	lbf	15100	N
Weight	6.426	lb	2.915	kg

TIMKEN

THE TIMKEN COMPANY
NORTH CANTON, OHIO USA

RAKH 1 7/16

Pillow Block Units Eccentric Locking Collar
(Includes Industrial and Standard Series)

Every reasonable effort has been made to ensure the accuracy of the information contained in this writing, but no liability is accepted for errors, omissions or for any other reason.

FOR DISCUSSION ONLY