The Timken Company
4500 Mt Pleasant St. NW
N. Canton, OH 44720
Phone: (234) 262-3000
E-Mail: CustomerCAD@timken.com • **Web site:** www.timken.com

Timken Part Number X32214 - Y32214, Tapered Roller Bearings - TS (Tapered Single) Metric

This is the most basic and most widely used type of tapered roller bearing. It consists of two main separable parts: the cone (inner ring) assembly and the cup (outer ring). It is typically mounted in opposing pairs on a shaft.



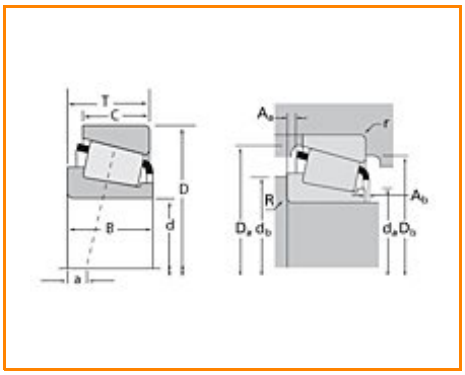

Specifications | Dimensions | Abutment and Fillet Dimensions | Basic Load Ratings | Factors

Specifications

Series	32214
Cone Part Number	X32214
Cup Part Number	Y32214
Design Units	METRIC
Bearing Weight	1.600 Kg 3.60 lb
Cage Type	Stamped Steel

Dimensions

d - Bore	70 mm 2.7559 in

D - Cup Outer Diameter	125 mm 4.9213 in
B - Cone Width	31.000 mm 1.2205 in
C - Cup Width	27 mm 1.063 in
T - Bearing Width	33.250 mm 1.3091 in

Abutment and Fillet Dimensions

R - Cone Backface "To Clear" Radius[1]	2.030 mm 0.080 in
r - Cup Backface "To Clear" Radius[2]	1.52 mm 0.06 in
da - Cone Frontface Backing Diameter	78.99 mm 3.11 in
db - Cone Backface Backing Diameter	82.04 mm 3.23 in
Da - Cup Frontface Backing Diameter	119.89 mm 4.72 in
Db - Cup Backface Backing Diameter	114.05 mm 4.49 in
Ab - Cage-Cone Frontface Clearance	4.1 mm 0.16 in
Aa - Cage-Cone Backface Clearance	2.8 mm 0.11 in
a - Effective Center Location[3]	-4.6 mm -0.18 in

Basic Load Ratings

C90 - Dynamic Radial Rating (90 million revolutions)[4]	47300 N 10600 lbf
C1 - Dynamic Radial Rating (1 million revolutions)[5]	182000 N 41000 lbf
C0 - Static Radial Rating	224000 N 50400 lbf
C_{a90} - Dynamic Thrust Rating (90 million revolutions)[6]	34000 N 7640 lbf

Factors

K - Factor[7]	1.39
e - ISO Factor[8]	0.42
Y - ISO Factor[9]	1.43
G1 - Heat Generation Factor (Roller-Raceway)	81.4
G2 - Heat Generation Factor (Rib-Roller End)	25.6
Cg - Geometry Factor	0.0779

[1] These maximum fillet radii will be cleared by the bearing corners.
[2] These maximum fillet radii will be cleared by the bearing corners.
[3] Negative value indicates effective center inside cone backface.
[4] Based on 90 x 10^6 revolutions L_{10} life, for The Timken Company life calculation method. C_{90} and C_{a90} are radial and thrust values.
[5] Based on 1 x 10^6 revolutions L_{10} life, for the ISO life calculation method.
[6] Based on 90 x 10^6 revolutions L_{10} life, for The Timken Company life calculation method. C_{90} and C_{a90} are radial and thrust values for a single-row, $C_{90(2)}$ is the two-row radial value.
[7] These factors apply for both inch and metric calculations. Consult your Timken representative for instruction on use.
[8] These factors apply for both inch and metric calculations. Consult your Timken representative for instruction on use.
[9] These factors apply for both inch and metric calculations. Consult your Timken representative for instruction on use.

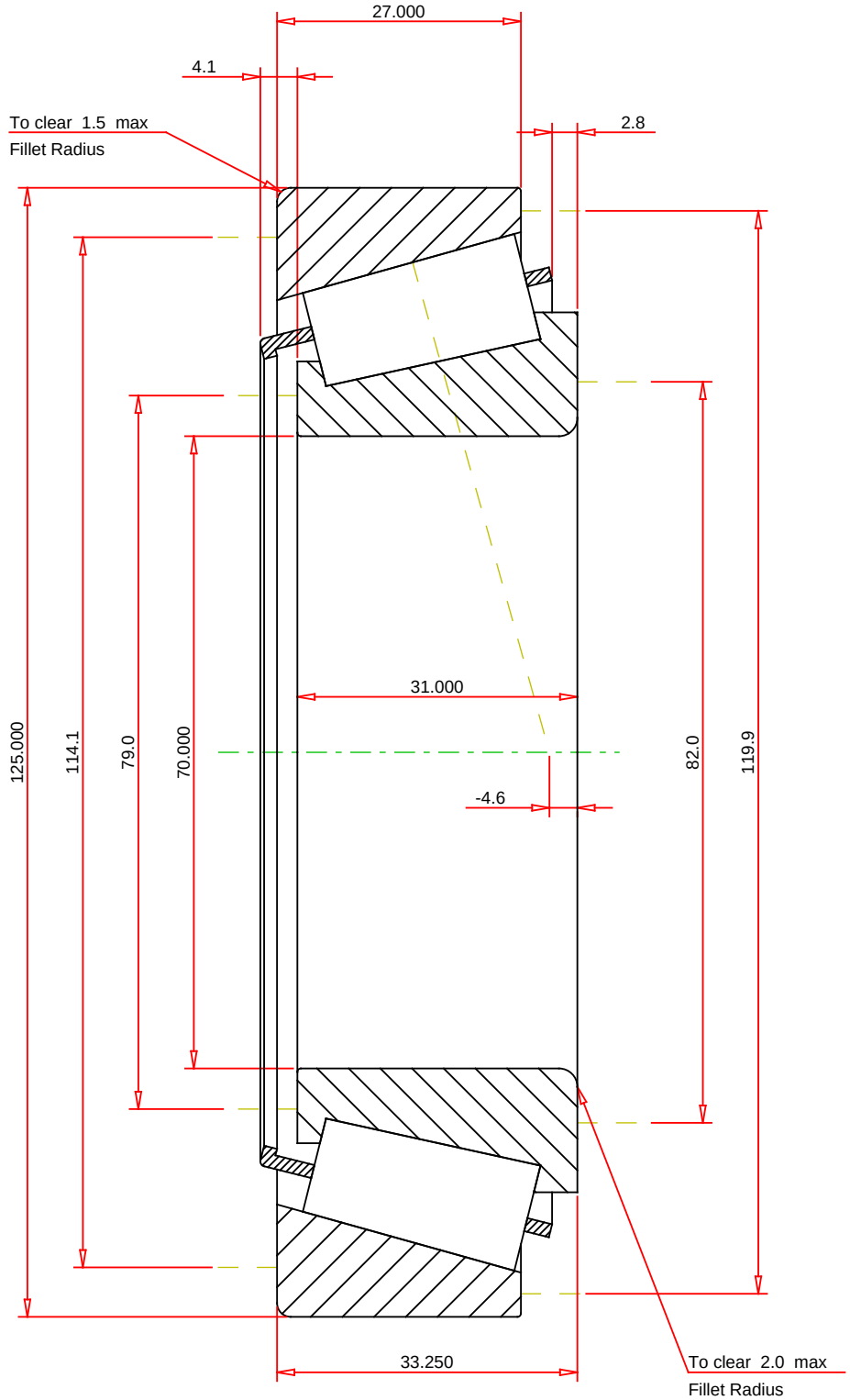

METRIC UNITS

ISO Factor - e	0.42	
ISO Factor - Y	1.43	
Bearing Weight	1.6	kg
Number of Rollers Per Row	19	
Effective Center Location	-4.6	mm

TIMKEN®

THE TIMKEN COMPANY
NORTH CANTON, OHIO USA

X32214 - Y32214
TS BEARING ASSEMBLY

K Factor	1.39	
Dynamic Radial Rating - C90	47300	N
Dynamic Thrust Rating - Ca90	34000	N
Static Radial Rating - C0	224000	N
Dynamic Radial Rating - C1	182000	N

Every reasonable effort has been made to ensure the accuracy of the information contained in this writing, but no liability is accepted for errors, omissions or for any other reason.

FOR DISCUSSION ONLY