The Timken Company
4500 Mt Pleasant St. NW
N. Canton, OH 44720
Phone: (234) 262-3000
E-Mail: CustomerCAD@timken.com • **Web site:** www.timken.com

Timken Part Number L879947 - L879910, Tapered Roller Bearings - TS (Tapered Single) Imperial

This is the most basic and most widely used type of tapered roller bearing. It consists of two main separable parts: the cone (inner ring) assembly and the cup (outer ring). It is typically mounted in opposing pairs on a shaft.



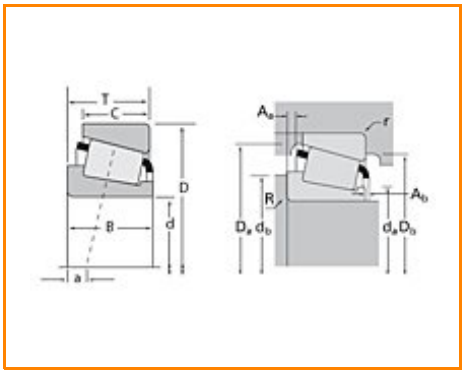

Specifications | Dimensions | Abutment and Fillet Dimensions | Basic Load Ratings | Factors

Specifications

Series	L879900
Cone Part Number	L879947
Cup Part Number	L879910
Design Units	Imperial
Bearing Weight	93.300 Kg 205.60 lb
Cage Type	Stamped Steel

Dimensions

d - Bore	609.600 mm 24.0000 in
D - Cup Outer Diameter	762.000 mm 30.0000 in
B - Cone Width	92.075 mm 3.6250 in
C - Cup Width	71.438 mm 2.8125 in
T - Bearing Width	95.250 mm 3.7500 in

Abutment and Fillet Dimensions

R - Cone Backface "To Clear" Radius[1]	6.35 mm 0.25 in
r - Cup Backface "To Clear" Radius[2]	6.35 mm 0.250 in
da - Cone Frontface Backing Diameter	632.97 mm 29.53 in
db - Cone Backface Backing Diameter	642.11 mm 25.28 in
Da - Cup Frontface Backing Diameter	743.46 mm 29.27 in
Db - Cup Backface Backing Diameter	720.09 mm 28.35 in
Ab - Cage-Cone Frontface Clearance	7.4 mm 0.29 in
Aa - Cage-Cone Backface Clearance	9.9 mm 0.39 in
a - Effective Center Location[3]	57.90 mm 2.28 in

Basic Load Ratings

C90 - Dynamic Radial Rating (90 million revolutions)[4]	513000 N 115000 lbf
C1 - Dynamic Radial Rating (1 million revolutions)[5]	1980000 N 445000 lbf
C0 - Static Radial Rating	5470000 N 1230000 lbf
C_{a90} - Dynamic Thrust Rating (90 million revolutions)[6]	428000 N 96300 lbf

Factors

K - Factor[7]	1.2
e - ISO Factor[8]	0.49
Y - ISO Factor[9]	1.23
G1 - Heat Generation Factor (Roller-Raceway)	9580
G2 - Heat Generation Factor (Rib-Roller End)	1010
Cg - Geometry Factor	0.306

[1] These maximum fillet radii will be cleared by the bearing corners.

[2] These maximum fillet radii will be cleared by the bearing corners.

[3] Negative value indicates effective center inside cone backface.

[4] Based on 90 x 10^6 revolutions L_{10} life, for The Timken Company life calculation method. C_{90} and C_{a90} are radial and thrust values.

[5] Based on 1 x 10^6 revolutions L_{10} life, for the ISO life calculation method.

[6] Based on 90 x 10^6 revolutions L_{10} life, for The Timken Company life calculation method. C_{90} and C_{a90} are radial and thrust values for a single-row, $C_{90(2)}$ is the two-row radial value.

[7] These factors apply for both inch and metric calculations. Consult your Timken representative for instruction on use.

[8] These factors apply for both inch and metric calculations. Consult your Timken representative for instruction

on use.

[9] These factors apply for both inch and metric calculations. Consult your Timken representative for instruction on use.

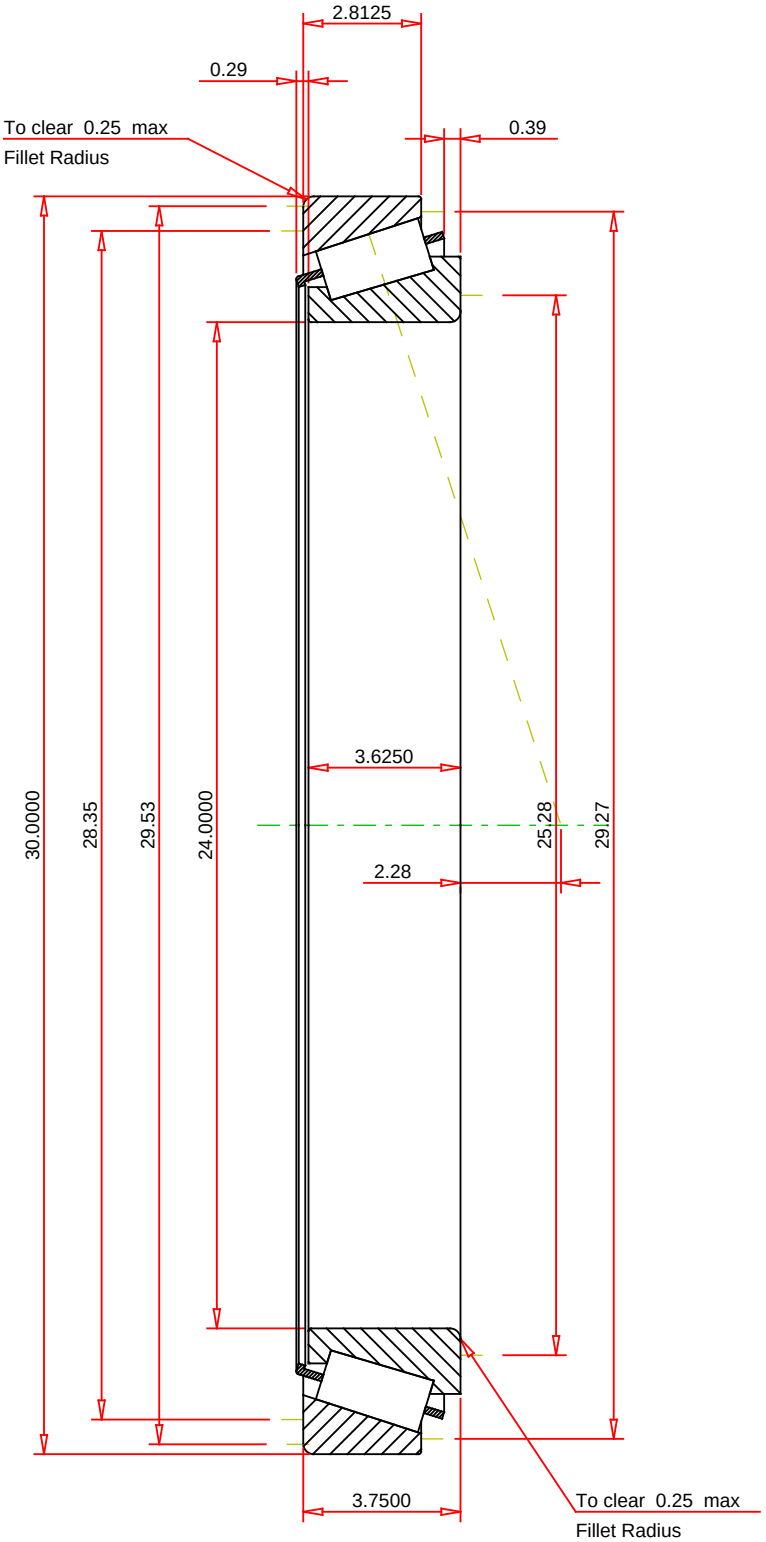

IMPERIAL UNITS

ISO Factor - e	0.49	
ISO Factor - Y	1.23	
Bearing Weight	205.6	lb
Number of Rollers Per Row	54	
Effective Center Location	2.28	inch

TIMKEN

THE TIMKEN COMPANY
NORTH CANTON, OHIO USA

L879947 - L879910
TS BEARING ASSEMBLY

K Factor	1.2	
Dynamic Radial Rating - C90	513000	lbf
Dynamic Thrust Rating - Ca90	428000	lbf
Static Radial Rating - C0	5470000	lbf
Dynamic Radial Rating - C1	1980000	lbf

Every reasonable effort has been made to ensure the accuracy of the information contained in this writing, but no liability is accepted for errors, omissions or for any other reason.

FOR DISCUSSION ONLY