The Timken Company
4500 Mt Pleasant St. NW
N. Canton, OH 44720
Phone: (234) 262-3000
E-Mail: CustomerCAD@timken.com • **Web site:** www.timken.com

Timken Part Number 18790 - 18721, Tapered Roller Bearings - TS (Tapered Single) Imperial

This is the most basic and most widely used type of tapered roller bearing. It consists of two main separable parts: the cone (inner ring) assembly and the cup (outer ring). It is typically mounted in opposing pairs on a shaft.



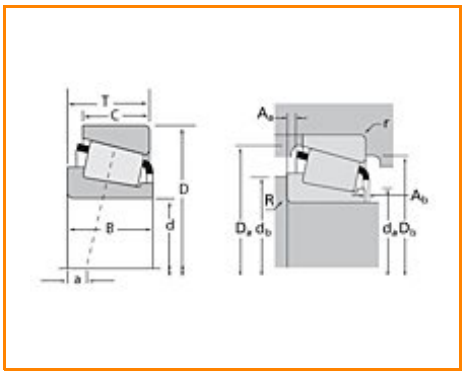

Specifications | Dimensions | Abutment and Fillet Dimensions | Basic Load Ratings | Factors

Specifications

Series	18700
Cone Part Number	18790
Cup Part Number	18721
Design Units	Imperial
Bearing Weight	0.300 Kg 0.80 lb
Cage Type	Stamped Steel

Dimensions

d - Bore	50.8 mm 2 in

D - Cup Outer Diameter	83.312 mm 3.2800 in
B - Cone Width	17.463 mm 0.6875 in
C - Cup Width	13.495 mm 0.5313 in
T - Bearing Width	17.463 mm 0.6875 in

Abutment and Fillet Dimensions

R - Cone Backface "To Clear" Radius[1]	3.560 mm 0.14 in
r - Cup Backface "To Clear" Radius[2]	0.76 mm 0.030 in
da - Cone Frontface Backing Diameter	55.88 mm 2.20 in
db - Cone Backface Backing Diameter	61.98 mm 2.44 in
Da - Cup Frontface Backing Diameter	79.00 mm 3.13 in
Db - Cup Backface Backing Diameter	76.96 mm 3.03 in
Ab - Cage-Cone Frontface Clearance	2.3 mm 0.09 in
Aa - Cage-Cone Backface Clearance	0.5 mm 0.02 in
a - Effective Center Location[3]	-0.8 mm -0.03 in

Basic Load Ratings

C90 - Dynamic Radial Rating (90 million revolutions)[4]	14200 N 3190 lbf
C1 - Dynamic Radial Rating (1 million revolutions)[5]	54700 N 12300 lbf
C0 - Static Radial Rating	67500 N 15200 lbf
C_{a90} - Dynamic Thrust Rating (90 million revolutions)[6]	9840 N 2210 lbf

Factors

K - Factor[7]	1.44
e - ISO Factor[8]	0.41
Y - ISO Factor[9]	1.48
G1 - Heat Generation Factor (Roller-Raceway)	28.6
G2 - Heat Generation Factor (Rib-Roller End)	21.5
Cg - Geometry Factor	0.0789

[1] These maximum fillet radii will be cleared by the bearing corners.
[2] These maximum fillet radii will be cleared by the bearing corners.
[3] Negative value indicates effective center inside cone backface.
[4] Based on 90 x 10^6 revolutions L_{10} life, for The Timken Company life calculation method. C_{90} and C_{a90} are radial and thrust values.
[5] Based on 1 x 10^6 revolutions L_{10} life, for the ISO life calculation method.
[6] Based on 90 x 10^6 revolutions L_{10} life, for The Timken Company life calculation method. C_{90} and C_{a90} are radial and thrust values for a single-row, $C_{90(2)}$ is the two-row radial value.
[7] These factors apply for both inch and metric calculations. Consult your Timken representative for instruction on use.
[8] These factors apply for both inch and metric calculations. Consult your Timken representative for instruction on use.
[9] These factors apply for both inch and metric calculations. Consult your Timken representative for instruction on use.

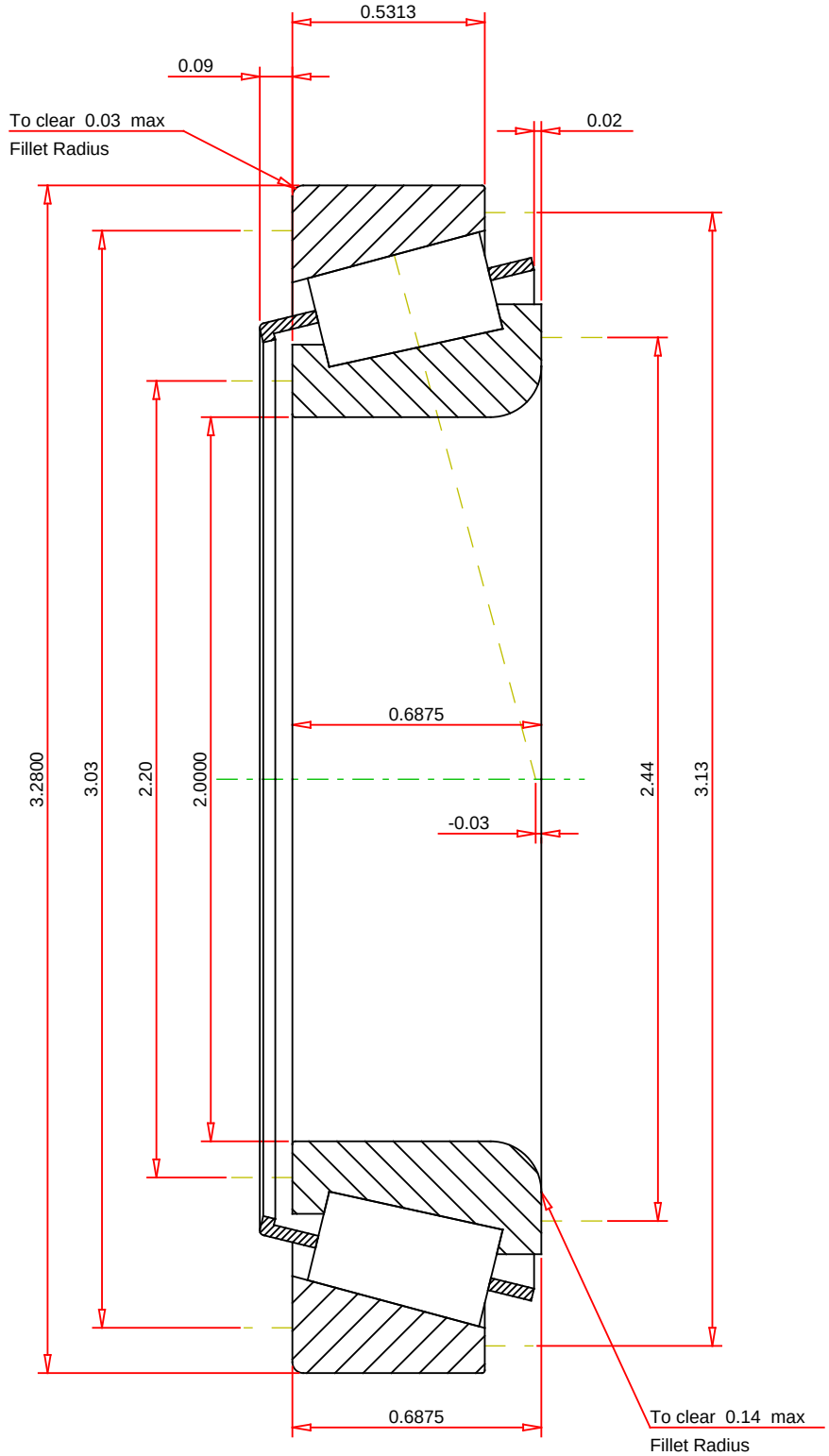

IMPERIAL UNITS

ISO Factor - e	0.41	
ISO Factor - Y	1.48	
Bearing Weight	0.8	lb
Number of Rollers Per Row	22	
Effective Center Location	-0.03	inch

TIMKEN

18790 - 18721
TS BEARING ASSEMBLY

THE TIMKEN COMPANY
NORTH CANTON, OHIO USA

K Factor	1.44	
Dynamic Radial Rating - C90	14200	lbf
Dynamic Thrust Rating - Ca90	9840	lbf
Static Radial Rating - C0	67500	lbf
Dynamic Radial Rating - C1	54700	lbf

Every reasonable effort has been made to ensure the accuracy of the information contained in this writing, but no liability is accepted for errors, omissions or for any other reason.

FOR DISCUSSION ONLY