The Timken Company
4500 Mt Pleasant St. NW
N. Canton, OH 44720
Phone: (234) 262-3000
E-Mail: CustomerCAD@timken.com • **Web site:** www.timken.com

Part Number VAK 1 3/8, Fafnir® Pillow Block Units Eccentric Locking Collar



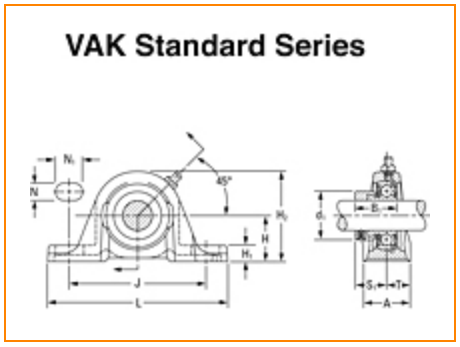

Specifications | Dimensions | Basic Load Ratings

Specifications

Shaft Size d	1 3/8 in 34.9 mm
Bearing Type	Ball Bearing
Bearing Number	GRA106RRB
Dimension T	0.890 in 22.6 mm
Series	Standard
Weight	3.514 lb 1.594 Kg
Seal Type	Molded Shroud
Housing Construction	Two-Bolt Pillow Block
Alternate Part Name	VAK1 3/8

Dimensions

Base to Center Height H	46.04 mm 1.813 in
Total Length L	166.7 mm 6.563 in
Total Width A	1.780 in 45.2 mm
Bolt Hole Spacing J	130.2 mm 5.126 in
Bolt Hole Width N	14.3 mm 0.563 in
Bolt Hole Length N1	24.6 mm 0.969 in
Foot Height H1	16.7 mm
Total Height H2	92.1 mm 3.626 in
Dimension L1	55.6 mm 2.189 in
Inside Ring Width B	N/A
Center of Bearing from End S	9.5 mm 0.374 in
Dimension B1	1.531 in 38.9 mm

Basic Load Ratings

Static Load Rating	3440 lbf 15300 N
Dynamic Load Rating	6400 lbf 28500 N

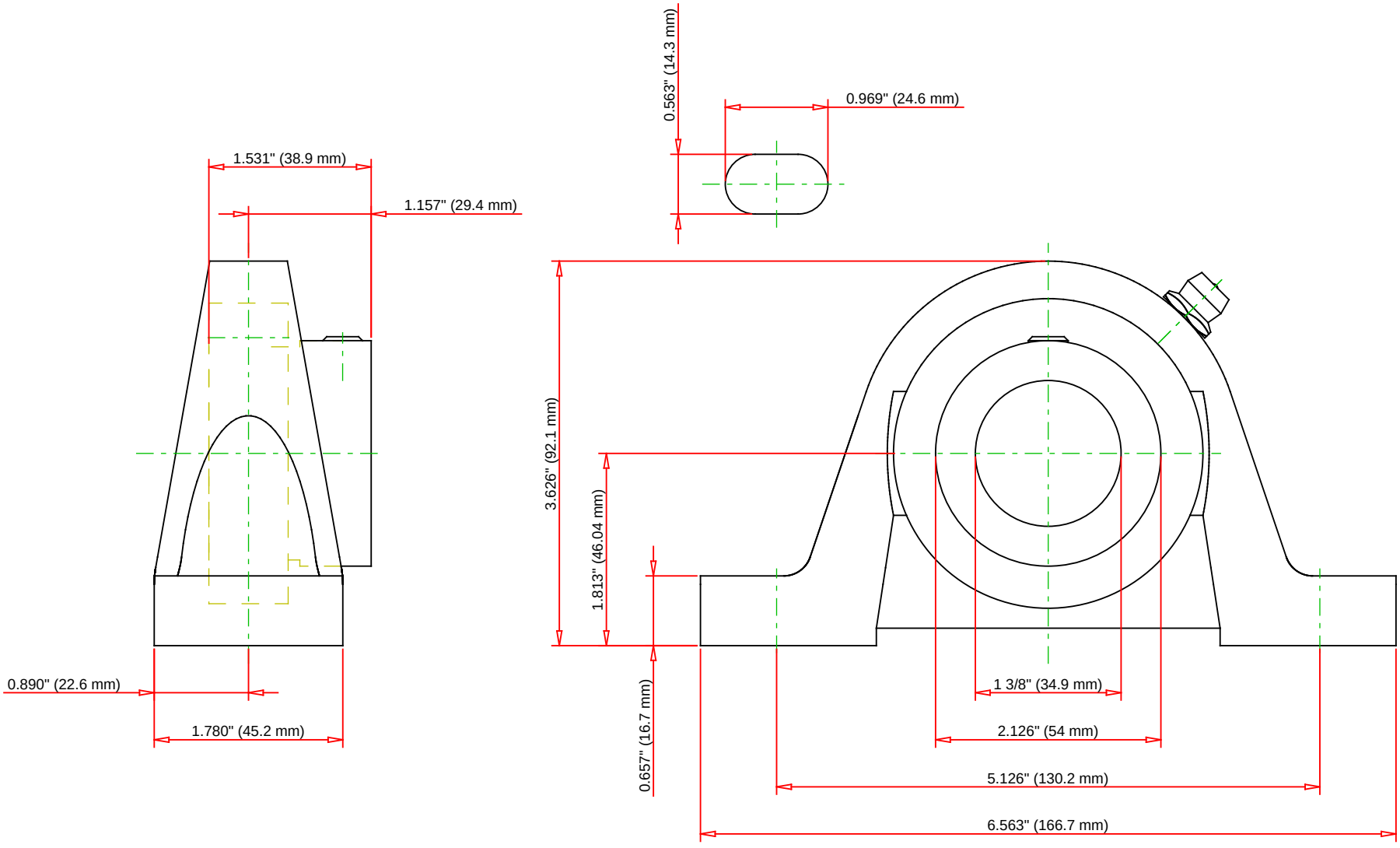

Bearing Number	GRA106RRB				
Load Ratings - C_r	6400	lbf	28500	N	
Load Ratings - C_{0r}	3440	lbf	15300	N	
Weight	3.514	lb	1.594	kg	

TIMKEN

THE TIMKEN COMPANY
NORTH CANTON, OHIO USA

VAK 1 3/8

Fafnir® Pillow Block Units Eccentric Locking Collar

Every reasonable effort has been made to ensure the accuracy of the information contained in this writing, but no liability is accepted for errors, omissions or for any other reason.

FOR DISCUSSION ONLY