The Timken Company
4500 Mt Pleasant St. NW
N. Canton, OH 44720
Phone: (234) 262-3000
E-Mail: CustomerCAD@timken.com • **Web site:** www.timken.com

Timken Part Number VAK 2 S, Pillow Block Units Eccentric Locking Collar (Includes Industrial and Standard Series)



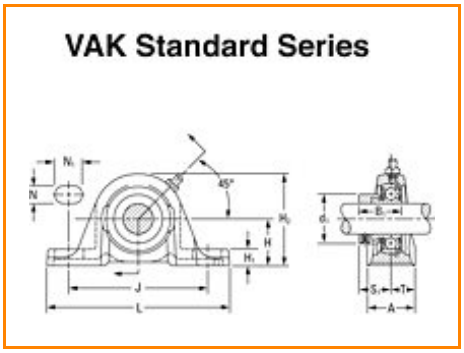

Specifications | Dimensions | Basic Load Ratings

Specifications

Bore Size d	2 in 50.8 mm
Bearing Number	GRA115RRB2
Inside Ring Outside Diameter	0.720 in 18.3 mm
Dimension B1	1.720 in 43.7 mm
Dimension T	1.094 in 27.8 mm
Series	Standard
Weight	6.116 lb 2.774 Kg
Seal Type	Molded Shroud

Dimensions

Shaft Height H	55.56 mm 2.187 in
Total Length L	200 mm 7.874 in
Total Width A	2.189 in 55.6 mm
Bolt Hole Spacing J	158 mm 6.220 in
Bolt Hole Width N	17.5 mm 0.689 in
Bolt Hole Length N1	23.8 mm 0.937 in
Base Height H1	17.5 mm 0.689 in
Total Height H2	112.7 mm 4.437 in
Dimension L1	66.7 mm 2.626 in
Inside Ring Width B	N/A
Center of Bearing from End S	11.2 mm 0.441 in

Basic Load Ratings

Static Load Rating	5100 lbf 22700 N
Dynamic Load Rating	8800 lbf 39200 N

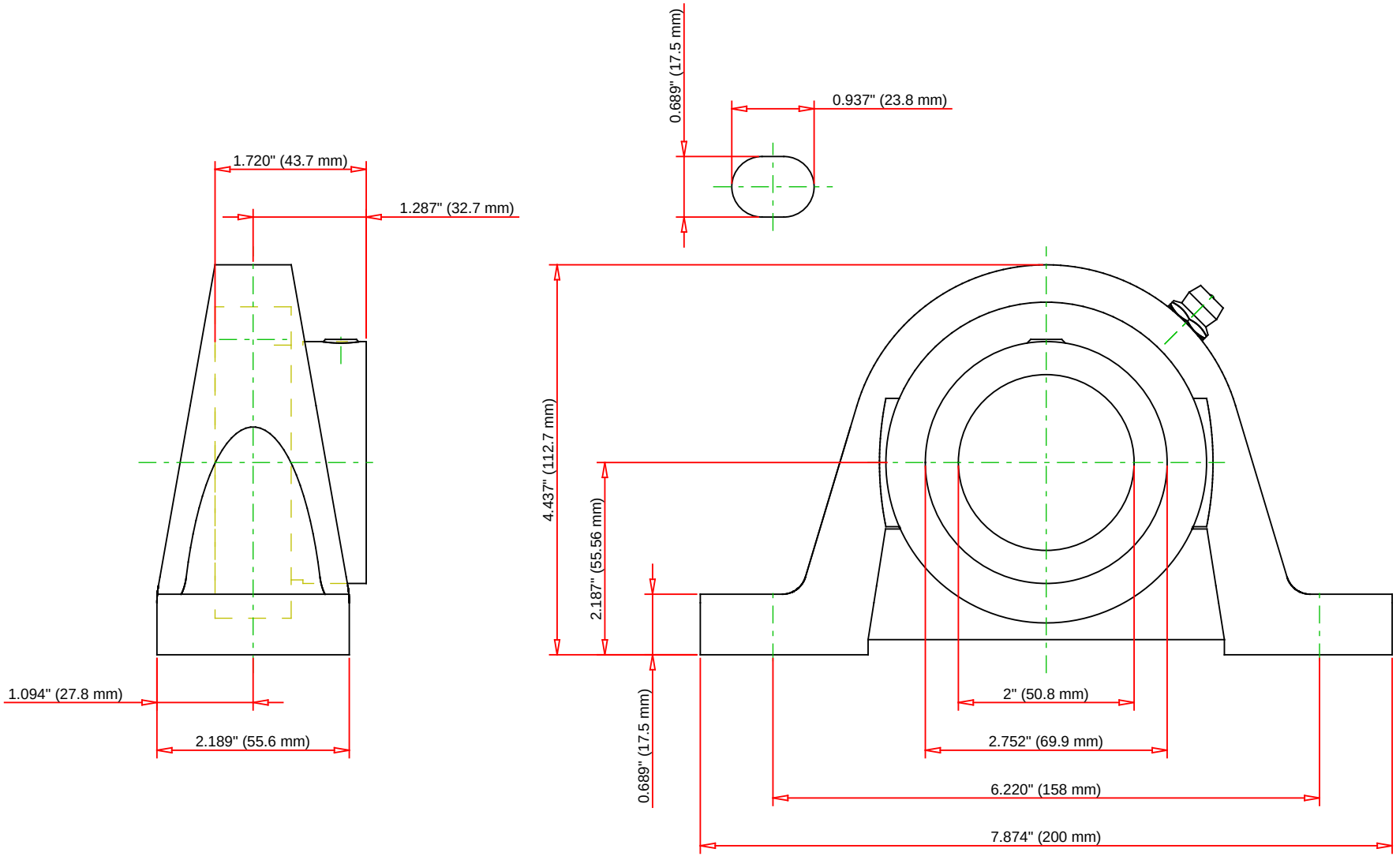

Bearing Number	GRA115RRB2			
Load Ratings - C_r	8800	lbf	39200	N
Load Ratings - C_{0r}	5100	lbf	22700	N
Weight	6.116	lb	2.774	kg

TIMKEN

THE TIMKEN COMPANY
NORTH CANTON, OHIO USA

VAK 2 S

Pillow Block Units Eccentric Locking Collar
(Includes Industrial and Standard Series)

Every reasonable effort has been made to ensure the accuracy of the information contained in this writing, but no liability is accepted for errors, omissions or for any other reason.

FOR DISCUSSION ONLY