The Timken Company
4500 Mt Pleasant St. NW
N. Canton, OH 44720
Phone: (234) 262-3000
E-Mail: CustomerCAD@timken.com • **Web site:** www.timken.com

Part Number VAS 7/8, Fafnir® Pillow Block Units Eccentric Locking Collar



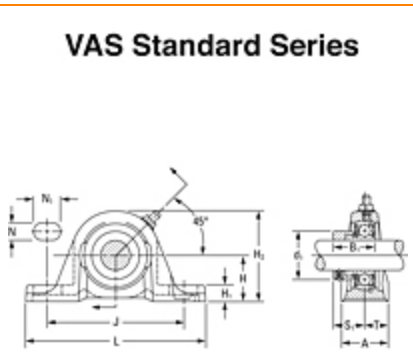

Specifications | Dimensions | Basic Load Ratings

Specifications

Shaft Size d	7/8 in 22.2 mm
Bearing Type	Ball Bearing
Bearing Number	GRA014RRB
Dimension T	0.705 in 17.9 mm
Series	Standard
Weight	1.671 lb 0.758 Kg
Seal Type	Molded Shroud
Housing Construction	Two-Bolt Pillow Block
Alternate Part Name	VAS7/8

Dimensions

Base to Center Height H	36.51 mm 1.437 in
Total Length L	139.7 mm 5.50 in
Total Width A	1.406 in 35.7 mm
Bolt Hole Spacing J	104.8 mm 4.126 in
Bolt Hole Width N	11.1 mm 0.437 in
Bolt Hole Length N1	20.6 mm 0.811 in
Foot Height H1	15.1 mm
Total Height H2	71.4 mm 2.811 in
Dimension L1	46.6 mm 1.835 in
Inside Ring Width B	N/A
Center of Bearing from End S	7.6 mm 0.299 in
Dimension B1	1.220 in 31 mm

Basic Load Ratings

Static Load Rating	1750 lbf 7800 N
Dynamic Load Rating	3490 lbf 15500 N

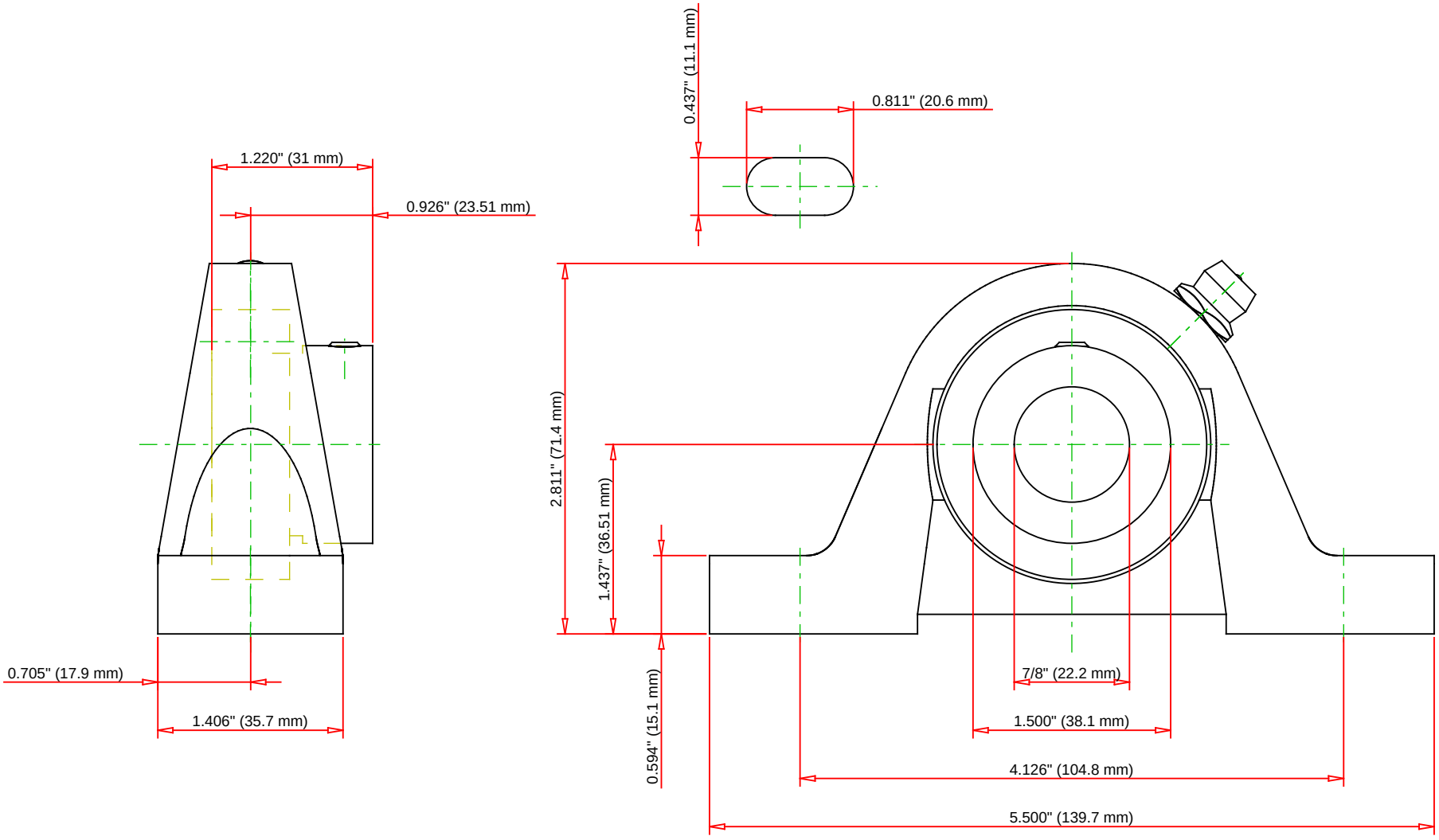

Bearing Number	GRA014RRB				
Load Ratings - C_r	3490	lbf	15500	N	
Load Ratings - C_{0r}	1750	lbf	7800	N	
Weight	1.671	lb	0.758	kg	

TIMKEN

THE TIMKEN COMPANY
NORTH CANTON, OHIO USA

VAS 7/8

Fafnir® Pillow Block Units Eccentric Locking Collar

Every reasonable effort has been made to ensure the accuracy of the information contained in this writing, but no liability is accepted for errors, omissions or for any other reason.

FOR DISCUSSION ONLY