Definite Purpose Contactors and Starters

0–40A Compact Contactor

25–60A Starter

Heavy-Duty Special Purpose

4.1 Product Overview—Contactors and Starters

Product Overview V5-T4-2
Application Description V5-T4-2
Catalog Number Selection V5-T4-3

4.2 Contactors

20–40A, Compact Single- and Two-Pole—C25 . . . . . V5-T4-4
15–360A, Two-, Three- and Four-Pole—C25 . . . . . V5-T4-8
Accessories V5-T4-11
15–40A, Three-Pole Fuse Block V5-T4-17
15–75A, Reversing and Two-Speed—C65 . . . . . V5-T4-20

4.3 Starters

25–60A, Single- and Three-Phase—A25, B25 . . . . . V5-T4-23
15–45A, Single- and Three-Phase—A27, B27 . . . . . V5-T4-30
15–75A, Single- and Three-Phase—A30, B30 and C440/XT Electronic Overload Relay V5-T4-38

4.4 NEMA Type 1 Enclosed Control

15–60A Contactors—C25 . . . . . V5-T4-46
25–60A Starters—A25, B25 . . . . . V5-T4-49
15–45A Starters—A27, B27 . . . . . V5-T4-52
Accessories V5-T4-55
Options V5-T4-57
Technical Data and Specifications V5-T4-58

4.5 Renewal Parts

Product Selection
Contact Kits, Coils V5-T4-59

4.6 Heavy-Duty Special Purpose Contactors

Product Selection V5-T4-64
Accessories V5-T4-64
Renewal Parts V5-T4-65
Technical Data and Specifications V5-T4-65
Dimensions V5-T4-66

4.7 Direct Current Contactors

DC Contactors—Type C80 . . . . . V5-T4-67
600V Contactors V5-T4-74
DPM 750V Contactor V5-T4-78
AVD–Contactor V5-T4-81
D–Contactor V5-T4-84
Reversing/Assignment Contactor V5-T4-87

4.8 Ratings

Ampere Rating of AC Motors V5-T4-90

Revision notes

Volume 5—Motor Control and Protection, CA08100006E

Tab 4—Definite Purpose Contactors and Starters

Revision date	Section	Change page(s)	Description
08/23/2018	All	All	Revision date changed to match print version date

Powering Business Worldwide

Definite Purpose Contactors and Starters

Contents

Description	*Page*
Contactors	
20–40A, Compact Single- and Two-Pole—C25	**V5-T4-4**
15–360A, Two-, Three- and Four-Pole—C25	**V5-T4-8**
15–40A, Three-Pole Fuse Block	**V5-T4-17**
15–75A, Reversing and Two-Speed—C65	**V5-T4-20**
Starters	
25–60A, Single- and Three-Phase—A25, B25	**V5-T4-23**
15–45A, Single- and Three-Phase—A27, B27	**V5-T4-30**
15–75A, Single- and Three-Phase—A30, B30 and C440/XT Electronic Overload Relay	**V5-T4-38**

Product Overview

Eaton offers the most complete line of Definite Purpose (DP) contactors in the industry. Designed for heating, ventilation, air conditioning and refrigeration (HVACR) applications, Eaton's DP contactors are designed to handle the most challenging installations.

Application Description

These ampere and horsepower rated devices from Eaton's Electrical Sector are designed for service in applications such as refrigeration, air conditioning and resistance heating and are manufactured to traditional standards for quality and reliability. They are subjected to stringent quality assurance inspections and testing procedures. The life expectancy, both electrical and mechanical, will meet or exceed industry performance requirements for Definite Purpose devices.

If more detailed technical information is required—specifications, ratings, and so on—contact your local Eaton distributor or sales office.

Features

- Completely encased design impervious to dust and other environmental elements
- 15–360A contactor ratings
- Single-, two-, three- and four-pole configurations
- Contactors and starters (up to 60A)
- Open components and enclosed designs

Catalog Number Selection

Definite Purpose Control—Contactors and Starters

C 25 D N A 2 15 A A 161 -84

Model

C = Contactor
A = Three-phase starter
B = Single-phase starter

Type

25 = Non-reversing contactors and starters (C306)
27 = Non-reversing starters (XTOB)
30 = Non-reversing starters (C440 EOL)
65 = Reversing contactors

Contactor Frame Size

A = Compact, single-pole
B = Compact, two-pole
C = Compact, single-pole w/shunt
D = 15–50A, two- and three-pole
E = 25–40A, four-pole
F = 60–75A, two- and three-pole
G = 90A, two- and three-pole
H = 120A, two- and three-pole
K = 200 and 300A, three-pole
L = 360A, three-pole

For Starters Only

C = Common control wiring
S = Separate control wiring

Enclosure Type

N = Open with metal mounting plate
R = Open with DIN rail mounting adapter (two- and three-pole, 15–50A contactors only)
G = NEMA Type 1 Enclosed

Power Terminals

A = Binding head screw
B = Binding head screw and quick connect terminals (side-by-side)
C = Screw/pressure plate ①
D = Screw/pressure plate and quick connect terminals (side-by-side) ①
E = Box lugs (posidrive setscrew)
F = Box lugs (posidrive setscrew) and quick connect terminals (side-by-side) ②
G = Binding head screw and quick connect terminals (vertical in-line)
H = Screw/pressure plate and quick connect terminals (vertical in-line) ①
J = Box lugs (posidrive setscrew) and quick connect terminals (vertical in-line)
K = Box lugs (hex socket allen head setscrew)
L = Box lugs (hex socket allen head setscrew) and quick connect terminals (side-by-side)
M = Box lugs (hex socket allen head setscrew) and quick connect terminals (vertical in-line)

Number of Poles

1 = Single-pole
2 = Two-pole
3 = Three-pole
4 = Four-pole

Current Rating

15 = 15A	**75** = 75A
25 = 25A	**90** = 90A
30 = 30A	**120** = 120A
40 = 40A	**200** = 200A
50 = 50A	**300** = 300A
60 = 60A	**360** = 360A

Coil Selection

A = 110–120 Vac, 50/60 Hz	**R** = 12 Vac, 50/60 Hz
B = 208–240 Vac, 50/60 Hz	**T** = 24 Vac, 50/60 Hz
C = 440–480 Vac, 50/60 Hz	**1R** = 12 Vdc
D = 550–600 Vac, 50/50 Hz	**1T** = 24 Vdc
H = 277 Vac, 60 Hz	**1W** = 48 Vdc
J = 220–240 Vac, 50/60 Hz	**1A** = 120 Vdc
L = 380–415 Vac, 50 Hz	

Auxiliary Contacts (Side Mount)

A = 1NO pressure plate
B = 1NC pressure plate
C = 1NO-1NC pressure plate
D = 2NO pressure plate
E = 2NC pressure plate
F = 1NO pressure plate and QC
G = 1NC pressure plate and QC
H = 1NO-1NC pressure plate and QC
J = 2NO pressure plate and QC
K = 2NC pressure plate and QC
L = 1NO-1NC snap switch QC only
M = 2NO-2NC snap switch QC only

Fuse Blocks

161 = Class M, 600V, 30A
237 = Class G, 300V, 15A
238 = Class G, 300V, 20A
231 = Class G, 300V, 30A
232 = Class G, 300V, 60A
361 = Class J, 600V, 30A
362 = Class J, 600V, 60A
431 = Class T, 300V, 30A
432 = Class T, 300V, 60A
461 = Class T, 600V, 30A
462 = Class T, 600V, 60A
521 = Class H, 250V, 30A
522 = Class H, 250V, 60A
621 = Class R, 250V, 30A
622 = Class R, 250V, 60A

Options

Blank = Individual pkg.
GL = Global listed
-84 = 20 pc./pkg. (C25D_)
50 pc./pkg. (C25A_, C25B_, C25C_)
-86 = Rotate coil terminals 180° for 15A–50A contactors

Notes

① Not available on 50A devices.
② Vertical in-line quick connect terminals on 60A and 75A F frame.

20–40A, Compact Single- and Two-Pole—C25

Contents

Description	*Page*
20–40A, Compact Single- and Two-Pole—C25	
Catalog Number Selection	**V5-T4-5**
Product Selection	**V5-T4-5**
Options	**V5-T4-6**
Technical Data and Specifications	**V5-T4-6**
Dimensions	**V5-T4-7**
15–360A, Two-, Three- and Four-Pole—C25	**V5-T4-8**
15–40A, Three-Pole Fuse Block	**V5-T4-17**
15–75A, Reversing and Two-Speed—C65	**V5-T4-20**

20–40A, Compact Single- and Two-Pole—C25

Product Description

Eaton's 20–40A, single- and two-pole, Type C25 contactors from Eaton's Electrical Sector feature a compact, efficient design with a low VA coil and straight-through wiring. New contactor housing design effectively limits dust and other contaminants from magnet structure—reduces or eliminates noise. These economically priced, UL recognized/CSA certified, ampere rated devices are well suited for use in heating/air conditioning, refrigeration, data processing and food service applications.

Standards and Certifications

- UL Recognized Components: UL File Number E1491, Guides NLDX2 and NLDX8
- CSA Certified Components: CSA C22.2 No. 14-05, File Number 238083 Class 3211 84
- IEC 60947-4-1
- EN 60947-4-1
- ARI 780/790 Standard
- CE
- RoHS Compliance

Catalog Number Selection

20–40A, Compact Single- and Two-Pole—C25

C25BNB230 — Incomplete catalog number

A — Magnet coil suffix

When Ordering Specify

- Catalog number plus magnet coil suffix, see below
- Modify catalog number for any options required, see Options, **Page V5-T4-6**

Product Selection

Compact Contactors—Open Type

	Ampere Rating ① Inductive Full Load	Resistive	Locked Rotor 240–277V	480V	575V	Maximum Motor (hp) 115V	230V	Maximum Motor (kW) 115V	230V	Catalog Number ②③
Single-Pole	**Single-Pole**									
	25	30	150	—	—	2	3	1.5	2.2	**C25ANB125_**
	30	40	150	75	50	2	5	1.5	3.7	**C25ANB130_**
	40	50	240	—	—	3	7-1/2	2.2	5.5	**C25ANB140_**
Single-Pole with Shunt	**Single-Pole with Shunt**									
	25	30	150	—	—	2	3	1.5	2.2	**C25CNB125_**
	30	40	150	75	50	2	5	1.5	3.7	**C25CNB130_**
	40	50	240	—	—	3	7-1/2	2.2	5.5	**C25CNB140_**
Two-Pole	**Two-Pole**									
	20	30	120	100	80	1-1/2	3	1.1	2.2	**C25BNB220_**
	25	35	150	125	100	2	3	1.5	2.2	**C25BNB225_**
	30	40	150	125	100	2	5	1.5	3.7	**C25BNB230_**
	40	50	240	200	160	3	7-1/2	2.2	5.5	**C25BNB240_**

Magnet Coil Suffix

AC Coil Voltage 50/60 Hz	Coil Suffix
24	**T**
110–120	**A**
208–240	**B**
277	**H**
380–415 (50 Hz), 440–480 (60 Hz)	**C**

Notes

① Rating per pole.
② Incomplete catalog number. Replace underscore (_) in catalog number with coil suffix letter from the table above.
③ Bulk pack quantities are available in quantities of 50, contact local sales office.

Options

When Ordering Specify

To order replace letter in the **6th** position of catalog number with letter **F**. Example: C25BN**F**240A.

Compact Factory Installed Options

Description
Box lugs with quick connects for 20–40A contactors
Single-pole
Single-pole with shunt
Two-pole

Technical Data and Specifications

20–40A, Compact Single- and Two-Pole—C25

Description	Specification
Insulation voltage	690V
Current rated and hp/kw rated contacts	Double break
Magnet coil	Class F, 155°C
Contact arc covers	Standard on all contactors
Standard power terminals	5/16 in hex washer head screws Quad (4) quick connect terminals on all line and load terminals Box lugs available as option
Line and load terminal designations	Marked on contactors
Operating temperature range	–13° to 158°F (–25° to 70°C)
Terminal wire range	
Hex washer head screws	6–10 AWG, 30 lb-in torque rating
Box lugs	6–10 AWG, 35 lb-in torque rating 8 AWG, 40 lb-in torque rating 6–4 AWG, 45 lb-in torque rating
Mounting position	Vertical, horizontal or tabletop

Coil Characteristics

AC Coil	Maximum Inrush VA		Maximum Sealed VA		Sealed Watts
Voltage 50/60 Hz	50 Hz	60 Hz	50 Hz	60 Hz	60 Hz
Single-Pole (with shunt)					
24	55	40	10.0	7.5	3.0
120	55	40	10.0	7.5	3.0
208/240	55	40	10.0	7.5	3.0
277	55	40	10.0	7.5	3.0
Two-Pole					
24	55	45	10.5	8.0	3.5
120	55	45	10.5	8.0	3.5
208/240	55	45	10.5	8.0	3.5
277	55	45	10.5	8.0	3.5
480	55	45	10.5	8.0	3.5

Dimensions

Approximate Dimensions in Inches (mm)

20–40A, Compact Single- and Two-Pole—C25

Single-Pole and Single-Pole + Shunt

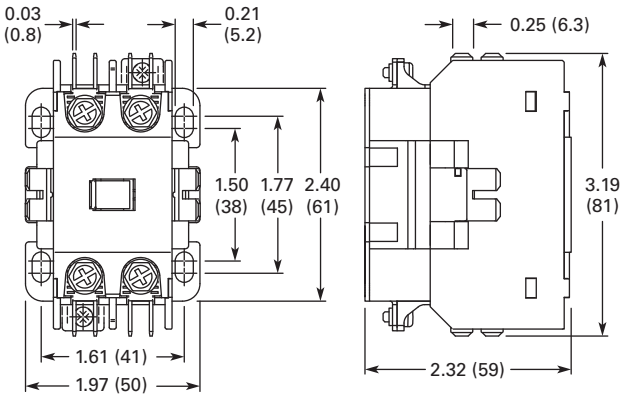

Approximate Shipping Weight
0.5 lb (0.2 kg)

Two-Pole

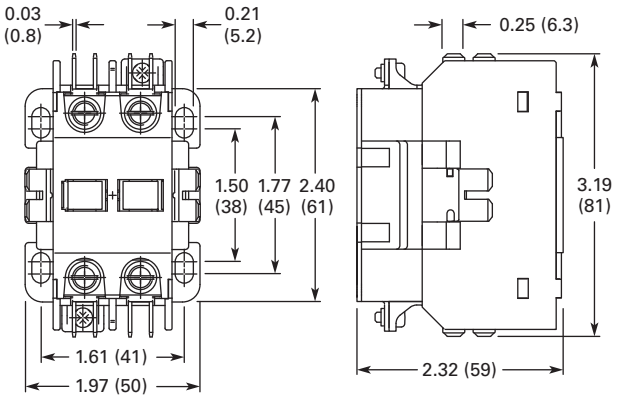

Approximate Shipping Weight
0.7 lb (0.3 kg)

15–360A, Two-, Three- and Four-Pole—C25

Contents

Description	*Page*
20–40A, Compact Single- and Two-Pole—C25	**V5-T4-4**
15–360A, Two-, Three- and Four-Pole—C25	
Product Selection	**V5-T4-9**
Accessories	**V5-T4-11**
Options	**V5-T4-13**
Technical Data and Specifications	**V5-T4-14**
Dimensions	**V5-T4-16**
15–40A, Three-Pole Fuse Block	**V5-T4-17**
15–75A, Reversing and Two-Speed—C65	**V5-T4-20**

15–360A, Two-, Three- and Four-Pole—C25

Product Description

Eaton offers the most comprehensive line of definite purpose contactors in the industry. Initially designed as an HVAC and refrigeration product, the C25 line is now the market leader and the product of choice for many OEMs and contractors serving diverse markets. Featuring current ratings between 15A and 360A, the contactors are dual-rated for inductive and resistive ratings as well as for horsepower and kilowatt ratings.

Other terminal configurations are available, see **Page V5-T4-13**. Contactors will accept add-on auxiliary contacts—order factory assembled or as kits for field installation.

The separately available snap-on mechanical interlock permits interlocking two contactors for reversing or two-speed applications.

Contactors between 15A and 50A are offered as two different lines—Standard and Global Listed.

Standard DP Contactors (15–50A, Two- and Three-Pole)

The standard line of C25 DP contactor features:

- Pressure plates and quick connects are standard on 15–30A contactors
- Lugs and quick connects are standard on 40A and 50A contactors
- Highest electrical life in its class—minimum 250,000 operations
- Universal baseplate allows for easy retrofit of competitive units (optional DIN rail mounting)
- UL recognized design in U.S. and Canada "cURus" (CSA approval pending)
- Accessories including auxiliary contacts, mechanical interlocks and fuse blocks
- RoHS (Reduction of Hazardous Substances) compliant

Global Listed Contactors (15–50A, Two- and Three-Pole)

In addition to all the features of the standard DP line, the Global Listed line also features:

- Exact footprint and mounting dimensions as the standard line—ideal for retrofits
- CE (Conformité Européen), CCC (China) and DEMKO (Denmark) certifications
- Higher electrical life—minimum 300,000 operations

Standards and Certifications

- UL Recognized Components UL File #E-1491, Guide NLDX2
- CSA Certified Components (excluding 90A) File #LR353, Class 3211 04, 481301 and 122201
- CE mark (Global line only) EN 60947-4-1
- RoHS Compliance (15A to 50A and 90A)

Product Selection

When Ordering Specify

- Catalog number plus magnet coil suffix, see **Page V5-T4-10**
- Catalog numbers of accessory kits required, see Accessories, **Page V5-T4-11**
- Modify catalog number for any options required, see Options, **Page V5-T4-13**

DP Contactor

C25 Contactors—Open Type

Ampere Rating				Maximum Motor (hp)		Maximum Motor (kW)			Standard DP Contactors		Global Listed Line
Inductive Full Load	Resistive per Pole	Line Voltage	Locked Rotor	Single-Phase	Three-Phase	Single-Phase	Three-Phase	Number of Poles	With Baseplate Catalog Number ①	With DIN Rail Adapter Catalog Number ①	With Baseplate Catalog Number ①
15	20	115	90	3/4	—	0.40	—	2	**C25DND215_**	**C25DRD215_**	**C25DND215_-GL**
		230	90	2	3	1.5	2.2	3	**C25DND315_**	**C25DRD315_**	**C25DND315_-GL**
		460	75	—	5	—	3.7				
		575	60	—	5	—	3.7				
25	35	115	150	2	—	1.5	—	2	**C25DND225_**	**C25DRD225_**	**C25DND225_-GL**
		230	150	3	7-1/2	2.2	5.5	3	**C25DND325_**	**C25DRD325_**	**C25DND325_-GL**
		460	125	—	10	—	7.5	4	**C25END425_**	—	—
		575	100	—	10	—	7.5				
30	40	115	180	2	—	1.5	—	2	**C25DND230_**	**C25DRD230_**	**C25DND230_-GL**
		230	180	5	10	3.7	7.5	3	**C25DND330_**	**C25DRD330_**	**C25DND330_-GL**
		460	150	—	15	—	11	4	**C25END430_**	—	—
		575	120	—	15	—	11				
40	50	115	240	3	—	2.2	—	2	**C25DNF240_**	**C25DRF240_**	**C25DNF240_-GL**
		230	240	7-1/2	10	5.5	7.5	3	**C25DNF340_**	**C25DRF340_**	**C25DNF340_-GL**
		460	200	—	20	—	15	4	**C25ENF440_**	—	—
		575	160	—	20	—	15				
50	65	115	300	3	—	2.2	—	2	**C25DNJ250_**	**C25DRJ250_**	**C25DNJ250_-GL**
		230	300	10	15	7.5	11	3	**C25DNJ350_**	**C25DRJ350_**	**C25DNJ350_-GL**
		460	250	—	30	—	22				
		575	200	—	30	—	22				
60	75	115	360	5	—	3.7	—	2	**C25FNF260_**	—	—
		230	360	10	20	7.5	15	3	**C25FNF360_**	—	—
		460	300	—	40	—	30				
		575	240	—	40	—	30				
75	90	115	450	5	—	3.7	—	2	**C25FNF275_**	—	—
		230	450	15	20	11	18.5	3	**C25FNF375_**	—	—
		460	375	—	50	—	37				
		575	300	—	50	—	37				
90	120	115	540	7-1/2	—	5.5	—	2	**C25GNF290_**	—	—
		230	540	15	30	11	22	3	**C25GNF390_**	—	—
		460	450	—	50	—	37				
		575	360	—	50	—	37				
120	140	230	720	—	—	—	—	3	**C25HNE3120_**	—	—
		460	720								
		575	570								
200	200	240	1200	—	—	—	—	3	**C25KNE3200_**	—	—
		480	1200								
		600	1000								
300	300	240	1800	—	—	—	—	3	**C25KNE3300_**	—	—
		480	1800								
		600	1500								
360	360	240	2320	—	—	—	—	3	**C25LNE3360_**	—	—
		480	2320								
		600	1900								

Note

① Incomplete catalog number. Replace underscore (_) in catalog number with magnet coil suffix from table on **Page V5-T4-10**.

Magnet Coil Suffix

Voltage 60 Hertz	50 Hertz	Coil Suffix
AC ①		
12 ②	12	**R**
24 ③	24	**T**
110–120 ④	110–120 ④	**A**
208 ⑤	—	**E**
208–240 ⑥	208–240	**B**
240 ⑦	220	**J**
277	—	**H**
—	380–415	**L**
440–480	440–480	**C**
550–600 ⑧	550–600	**D**

Voltage 60 Hertz	Coil Suffix
DC ⑨	
12	**1R**
24	**1T**
48	**1W**
120	**1A** ⑩

Notes

① Class H AC coils available as option for 15A–50A contactor. Add 2 before AC coil suffix letter.
② Available through 75A.
③ Available through 120A.
④ 104–120V 50/60 Hz for 60A, 75A and all four-pole contactors (25A–40A).
⑤ Available 120–360A.
⑥ Available 15–90A, others 240V.
⑦ Available through 50A.
⑧ Not available for 90A.
⑨ Contactors with DC coils (only available up to 75A) include an early break NC auxiliary contact, C320KGD1. See **Page V5-T4-62** for more details.
⑩ Available only for 15A through 75A contactors and four-pole contactors.

Accessories

Auxiliary Contact Kits (Side Mounted)

Side Mounted Auxiliary Contact

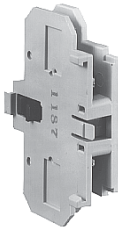

Auxiliary Contact for FI Series Contactors

Heavy-Duty Pilot Rated for 10A at 600 Vac

Circuit	With Standard Pressure Plate Terminals Catalog Number	With Pressure Plate and Quick Connect Terminals Catalog Number
For 15 through 75A		
1NO	**C320KG1**	**C320KG11**
1NC	**C320KG2**	**C320KG12**
1NO-1NC	**C320KG3**	**C320KG13**
2NO	**C320KG4**	**C320KG14**
2NC	**C320KG5**	**C320KG15**
For 90A		
1NO	—	**FIC320DPG10** ①
1NC	—	**FIC320DPG01** ①
1NO-1NC	—	**FIC320DPG11** ①
2NO	—	**FIC320DPG20** ①
For 120 through 360A		
1NO	**C320KGS20**	—
1NC	**C320KGS21**	—
1NO-1NC	**C320KGS22**	—

Side Mounted Snap Switch

Snap Switch Design Side Mounted Auxiliary Contacts (For 15–75A Contactors Only)

Circuit	Snap Switch Design with Quick Connect Terminals Catalog Number
1NO-1NC	**C320SNP11**
2NO-2NC	**C320SNP22**

Magnet Coil Quick Connect Terminal

Description
Extra dual quick connect terminals (U-shaped) for magnet coil terminals ②

Notes

① Valid on Series **FI** contactors only.

② To order, add suffix number **9** to the complete catalog number. Example: C25DND215A**9**.

Auxiliary Contact Kits (Top Mounted)

Top Mounted Auxiliary Contact

Heavy-Duty Pilot Rated for 10A at 600 Vac

Circuit	With Standard Pressure Plate Terminals Catalog Number	Circuit	With Standard Pressure Plate Terminals Catalog Number
For 15 through 75A ①			
1NO	**C320KGT1**	1NO-2NC	**C320KGT11**
1NC	**C320KGT2**	3NC	**C320KGT12**
1NO-1NC	**C320KGT3**	4NO	**C320KGT13**
2NO	**C320KGT4**	3NO-1NC	**C320KGT14**
2NC	**C320KGT5**	2NO-2NC	**C320KGT15**
3NO	**C320KGT9**	1NO-3NC	**C320KGT16**
2NO-1NC	**C320KGT10**	4NC	**C320KGT17**

Mechanical Interlock

Mechanical Interlock Kit

Description	Catalog Number
Mechanical interlock kit for 15 through 75A	**C321KM60B**

Solid-State ON DELAY Timer

Side mounted on C25D, C25E and C25F frame.

This timer is designed to be **wired in series with the load** (typically a coil). When the START button is pushed (power applied to timer), the ON DELAY timing function starts. At the completion of the set timing period, timer and series wired load will both be energized.

Solid-State ON DELAY Timer

Solid-State ON DELAY Timer

Timing Range	Catalog Number ②③④
0.1–1.0 seconds	**C320TDN1_**
1–30 seconds	**C320TDN30_**
30–300 seconds	**C320TDN300_**
5–30 minutes	**C320TDN3000_**

Separate Enclosures

NEMA 1 Enclosure

Separate Enclosures—NEMA 1

Application	Catalog Number
15 through 50A, two- and three-pole	**C799B18**
60A, two- and three-pole or 25 through 40A, four-pole	**C799B19**

Notes

① Not available for four-pole contactors (15–40 Amp).
② Add operating voltage suffix to catalog number.
A = 120V, **B** = 240V, **E** = 208V
③ Rated 0.5 ampere pilot duty—not to be used on larger contactors.
④ Terminal connections are quick connects only. Two per side.

Options

To order C25, C65, A25 and B25 contactors and starters with the factory installed options listed below, change the basic catalog number listed in the product selection table as noted.

Factory Installed Options

Description	Code Letter	Number of Poles
Terminals—15A through 50A		
Binding head screws		
Without quick connect terminals	**A**	2-, 3-, 4-pole
With quick connect terminals (side-by-side)	**B**	2-, 3-, 4-pole
With quick connect terminals (vertical in-line)	**G**	2-, 3-pole
Screw/pressure plate ①		
Without quick connect terminals	**C**	2-, 3-, 4-pole
With quick connect terminals (side-by-side)	**D**	2-, 3-, 4-pole
With quick connect terminals (vertical in-line)	**H**	2-, 3-pole
Box lugs (#2 posidrive/slotted screw		
Without quick connect terminals	**E**	2-, 3-, 4-pole ②
With quick connect terminals (side-by-side)	**F**	2-, 3-, 4-pole ②
With quick connect terminals (vertical in-line)	**J**	2-, 3-pole
Box lugs (hex socket allen head screw)		
Without quick connect terminals	**K**	2-, 3-pole
With quick connect terminals (side-by-side)	**L**	2-, 3-pole
With quick connect terminals (vertical in-line)	**M**	2-, 3-pole
Terminals—60A through 75A ③		
Box lugs (slotted screw)		
Without quick connect terminals	**E**	2-, 3-pole
With quick connect terminals	**F**	2-, 3-pole

Field Installed Options

Description	Catalog Number
Finger-proof shield for 15–50A	**49-7899KIT** ⑤⑥

Auxiliary Contacts (Side Mount)

Add code letter listed below to complete catalog number.
Example: Change C25DND215**A** to C25DND215**AA**.

Auxiliary Contacts—Factory Installed

Description	With Standard Pressure Plate Terminals Code Letter	With Quick Connect Terminals Code Letter	Snap Switch Design with Quick Connect Terminals Code Letter
For 15 through 90A ④			
1NO	**A**	**F**	—
1NC	**B**	**G**	—
1NO-1NC	**C**	**H**	—
2NO	**D**	**J**	—
2NC	**E**	**K**	—
For 15 through 75A			
1NO-1NC	—	—	**L**
2NO-2NC	—	—	**M**
For 120 through 360A			
1NO	**A**	—	—
1NO-1NC	**C**	—	—
2NO	**D**	—	—
2NC	**E**	—	—
Special Marking (Special contactor marking, consult local sales office)			

Notes

① Screw/pressure plate terminals are not available on 50A contactors.
② Four-pole contactors have box lugs with slotted screws.
③ Replace letter in the **6th** position of catalog number with code letter listed. Example: Change C25FN**F**250 to C25FN**E**250.
④ 90A available only with binding head screw and quick connect terminals.
⑤ Kit contains quantity 1 shield.
⑥ Not for use with Quick Connect terminals on the power poles.

Technical Data and Specifications

Standard and Global Listed Line

15–360A, Two-, Three- and Four-Pole—C25

Description	Specification Standard	Global Listed Line
Magnet coil	Class B (C25E, F, G, H and K), 130°C Class F (C25D and L), 155°C Class H (C25D), 180°C (available as factory installed option)	Class B (C25E, F, G, H and K), 130°C Class F (C25D and L), 155°C Class H (C25D), 180°C (available as factory installed option)
Contacts	Double break	Double break
Coil terminals	18 AWG (90A)	18 AWG (90A)
Ambient temperature	150°F (65°C) maximum	150°F (65°C) maximum
Terminal wire range		
#8–32 binding head screw	14–12 AWG (one conductor-solid)	14–12 AWG (one conductor-solid)
#8–32 screw/pressure plate	14–8 AWG (one conductor); 14–8 AWG (two conductors)	14–8 AWG (one conductor); 14–8 AWG (two conductors)
Box lugs—15–50A ①	# 2 posidrive screw or 5/32 hex socket screw Upper level: 14–4 AWG (one conductor) Lower level: 14–6 AWG (one conductor)	# 2 posidrive screw or 5/32 hex socket screw Upper level: 14–4 AWG (one conductor) Lower level: 14–6 AWG (one conductor)
Box lugs—60–75A ①	Upper level: 14–2 AWG Lower level: 14–6 AWG	Upper level: 14–2 AWG Lower level: 14–6 AWG
Box lugs—90A	1/0–8 AWG	1/0–8 AWG
Box lugs—120A	3/0–8 AWG	3/0–8 AWG
Box lugs—200–300A	350 kcmil–6 AWG	350 kcmil–6 AWG
Box lugs—360A	750 kcmil–2 AWG	750 kcmil–2 AWG

Contactor Torque Ratings

Contactor Size	Terminal	Wire Range	Tightening Torque
15–50A ②	8–32 binding head screw	12–14 AWG	22 lb-in
	Screw/pressure plate	8–14 AWG	15 lb-in
	Box lug	12–14 AWG	15 lb-in
		10 AWG	25 lb-in
		8 AWG	40 lb-in
		4–6 AWG	45 lb-in
60–75A ③	Box lug	10–14 AWG	40 lb-in
		8 AWG	45 lb-in
		3–6 AWG	50 lb-in
90A	Box lug	1/0–8 AWG	60 lb-in
120A	Box lug	8 AWG	40 lb-in
		4–6 AWG	45 lb-in
		3–1/0 AWG	50 lb-in
200–300A	Box lug	6–350 kcmil	200 lb-in
360A	Box lug	2–750 kcmil	550 lb-in

Notes

① The box lugs on the 15–75A device can accept two conductors per pole.

② The box lugs on the 15–50A device can accept two conductors per pole, the upper section will accept 4–14 AWG and the lower section will accept 6–14 AWG.

③ The box lugs on the 60–75A device can accept two conductors per pole, the upper section will accept 3–14 AWG and the lower section will accept 6–14 AWG.

For Global Line Only

DC Ratings (Global Listed Line Only)

	Two-Pole, 15–30A Inductive			Two-Pole, 40A Inductive			Three-Pole, 15–30A Inductive			Three-Pole, 40A Inductive		
	UL/CSA		DC-3/DC-5	UL/CSA		DC-3/DC-5	UL/CSA		DC-3/DC-5	UL/CSA		DC-3/DC-5
Voltage	**FLA**	**hp**	**I_e**	**FLA**	**hp**	**I_e**	**FLA**	**hp**	**I_e**	**FLA**	**hp**	**I_e**
240 Vdc three poles in series	—	—	—	—	—	—	4	3/4	4	5	1	5
120 Vdc three poles in series	—	—	—	—	—	—	8	3/4	8	10	1	10
120 Vdc two poles in series	5.5	1/2	5.5	8	3/4	8	5.5	1/2	5.5	8	3/4	8
120 Vdc per pole	2	1/10	2	3.5	1/4	3.5	2	1/10	2	3.5	1/4	3.5
24 Vdc per pole	15	—	15	20	—	20	15	—	15	20	—	20

Lighting Duty Ratings (Global Listed Line Only)

C25D_ Inductive Rating	Tungsten and Ballast (480V)
25A	30A
30A	40A
40A	50A
50A	60A

IEC/CE Ratings (IEC 60947-4-1, EN 60947-4-1) for 15A through 50A C25 D–Contactors (Global Listed Line Only)

C25D_	AC-1 (I_C)		AC-3 (I_e)		AC-4 (I_e)		AC-8a	
Inductive Rating	**480V**	**600V**	**480V**	**600V**	**480V**	**600V**	**480V**	**600V**
15A	20A	20A	15A	15A	15A	—	15A	15A
25A	30A	30A	25A	25A	25A	—	25A	25A
30A	40A	40A	30A	30A	30A	—	30A	30A
40A	50A	—	40A	—	40A	—	40A	—
50A	65A	65A	50A	50A	50A	—	50A	50A

Dimensions

Approximate Dimensions in Inches (mm)

C25 Contactors, Open Type and Open Type—Reversing

15–75 Ampere (Non-Reversing)

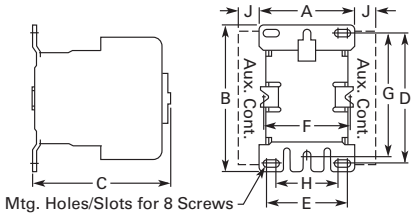

15–75 Ampere (Reversing)

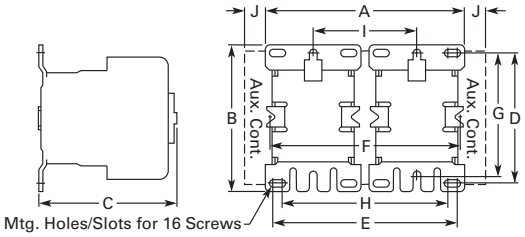

90 Ampere

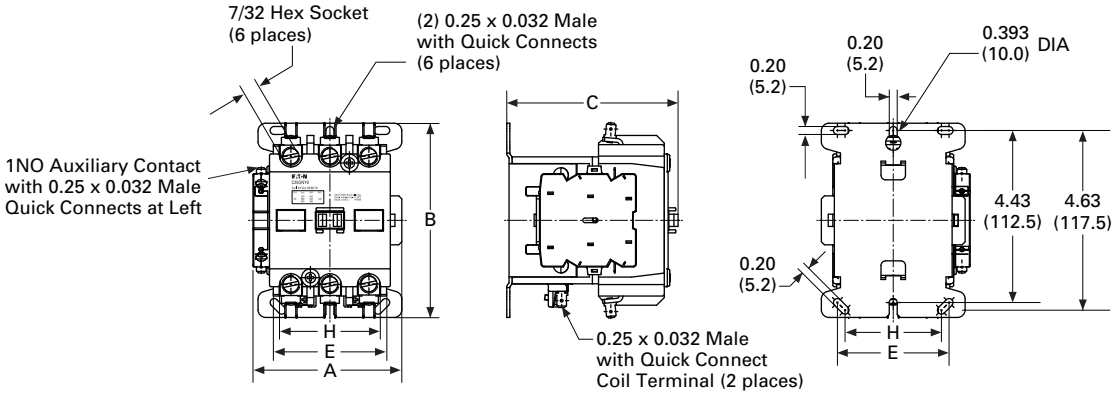

120 Ampere

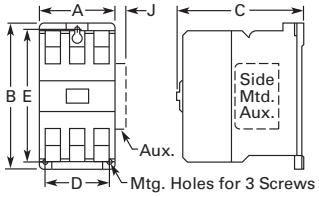

200–360 Ampere

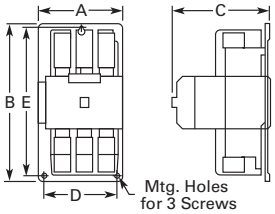

Dimensions and Shipping Weights

Ampere Size	Number of Poles	Wide A	High B	Deep C	Mounting D	E	F	G	H	Side Auxiliary Contact Adder J	Shipping Weight Lbs (kg)
Open Type											
15–50	2 and 3	2.40 (61.0) ①	3.75 (95.0)	3.35 (85.0)	3.25 (83.0)	2.00 (51.0)	—	3.13 (79.0)	1.50 (38.0)	0.34 (8.6)	1.3 (.6)
25–40	4	2.68 (68.0) ①	3.75 (95.0)	3.38 (86.0)	3.25 (83.0)	2.00 (51.0)	1.50 (38.0)	3.13 (79.0)	1.50 (38.0)	0.50 (12.5)	2.3 (1.0)
60–75	2 and 3	2.63 (67.0) ①	3.75 (95.0)	3.97 (101.0)	3.25 (83.0)	2.00 (51.0)	1.50 (38.0)	3.13 (79.0)	1.50 (38.0)	0.37 (9.5)	2.8 (1.3)
90	2 and 3	3.86 (98.0)	5.00 (127.0)	4.41 (112.0)	—	2.87 (73.0)	—	—	2.48 (63.0)	—	NN (NN)
120	2 and 3	3.54 (90.0)	7.17 (182.0)	5.94 (151.0)	3.00 (76.0)	6.63 (168.0)	—	—	—	0.54 (13.7)	8.5 (3.9)
200 and 300	2 and 3	7.05 (179.0)	9.11 (232.0)	7.25 (184.0)	6.00 (152.0)	8.50 (216.0)	—	—	—	—	20.0 (9.1)
360	2 and 3	7.05 (179.0)	13.12 (333.0)	7.78 (198.0)	6.00 (152.0)	12.50 (318.0)	—	—	—	—	23.0 (10.4)
Open Type—Reversing											
15–50	2 and 3	5.0 (127.0)	3.75 (95.0)	3.35 (85.0)	3.25 (83.0)	4.53 (118.0)	—	3.13 (79.0)	4.13 (105.0)	0.34 (8.6)	2.6 (1.2)
60–75	2 and 3	5.77 (147.0)	3.75 (95.0)	3.97 (101.0)	3.25 (83.0	5.15 (131.0)	3.15 (80.0)	3.13 (79.0)	4.65 (118.0)	0.37 (9.5)	5.6 (2.5)

Note

① Add 0.30 in (8 mm) to width for C25 contactors with DC coils.

15–40A, Three-Pole Fuse Block

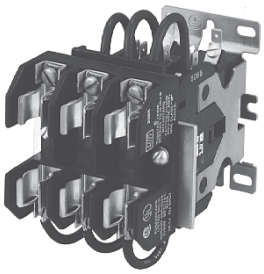

Contents

Description	*Page*
20–40A, Compact Single- and Two-Pole—C25	**V5-T4-4**
15–360A, Two-, Three- and Four-Pole—C25	**V5-T4-8**
15–40A, Three-Pole Fuse Block	
Product Selection	**V5-T4-18**
Dimensions	**V5-T4-19**
15–75A, Reversing and Two-Speed—C65	**V5-T4-20**

15–40A, Three-Pole Fuse Block

Product Description

Designed to save space and reduce installation costs, these three-pole fuse blocks will accommodate a variety of fuse classes and fuse holders to satisfy a wide range of electrical/electronic applications such as commercial space and water heaters, dishwashers, food coolers and sterilizing equipment. They are supplied either factory assembled, mounted and wired to the contactor or in kit form.

Note: Available only on three-pole, 15–50A contactors

Product Selection

Optional Three-Pole Fuse Block

Available only on three-pole, 15–50A contactors

Designed to save space and reduce installation costs, these three-pole fuse blocks will accommodate a variety of fuse classes and fuse holders to satisfy a wide range of electrical/electronic applications such as commercial space and water heaters, dishwashers, food coolers and sterilizing equipment. They are supplied either factory assembled, mounted and wired to the contactor or in kit form.

To order factory assembled, add suffix number from table below to catalog number of contactor listed on **Page V5-T4-9**. Example: C25DND325A**361**.

Three-Pole Fuse Block

Three-Pole Fuse Blocks

Fuse Holder Volts	Amperes	Fuse Dimensions in Inches (mm) Diameter	Length	Terminal Type	Maximum Wire Size	Factory Installed Ordering Suffix	Field Installation Kit Catalog Number
Class M							
600	30	0.41 (10.4)	1.50 (38.1)	Pressure plate	10 AWG Cu	**161**	**C350KM61**
Class G							
600	15	0.41 (10.4)	1.31 (33.3)	Pressure plate	10 AWG Cu	**237**	**C350KG37**
	20		1.41 (35.8)	Pressure plate	10 AWG Cu	**238**	**C350KG38**
480	30	0.41 (10.4)	1.63 (41.4)	Pressure plate	10 AWG Cu	**231**	**C350KG31**
	60		2.25 (57.2)	Box lug	2 AWG Cu/Al	**232**	**C350KG32**
Class J							
600	30	0.81 (20.6)	2.25 (57.2)	Pressure plate	10 AWG Cu	**361**	**C350KJ61**
	60	1.06 (26.9)	2.38 (60.5)	Box lug	2 AWG Cu/Al	**362**	**C350KJ62**
Class T							
300	30	0.41 (10.4)	0.88 (22.4)	Box lug	6 AWG Cu	**431**	**C350KT31**
	60	0.56 (14.2)	0.88 (22.4)	Box lug	2 AWG Cu/Al	**432**	**C350KT32**
600	30	0.56 (14.2)	1.50 (38.1)	Box lug	6 AWG Cu	**461**	**C350KT61**
	60	0.81 (20.6)	1.56 (39.6)	Box lug	2 AWG Cu/Al	**462**	**C350KT62**
Class H							
250	30	0.56 (14.2)	2.00 (50.8)	Pressure plate	10 AWG Cu	**521**	**C350KH21**
	60	0.81 (20.6)	3.00 (76.2)	Box lug	2 AWG Cu/Al	**522**	**C350KH22**
Class R							
250	30	0.56 (14.2)	2.00 (50.8)	Pressure plate	10 AWG Cu	**621**	**C350KR21**
	60	0.81 (20.6)	3.00 (76.2)	Box lug	2 AWG Cu/Al	**622**	**C350KR22**

Dimensions

Approximate Dimensions in Inches (mm)

Three-Pole Fuse Block and Contactor

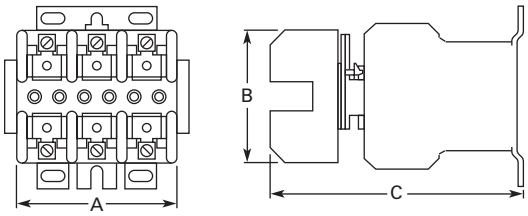

Front View Side View

Fuse Size Class	Amps	Volts	Wide A	High B	Deep C
G	15	600	2.41 (61)	2.81 (71)	5.14 (131)
	20		2.41 (61)	2.81 (71)	5.14 (131)
	30	480	2.41 (61)	2.81 (71)	5.14 (131)
	60		2.62 (67)	4.25 (108)	5.18 (132)
H	30	250	3.00 (76)	3.03 (77)	5.33 (135)
	60		4.22 (107)	4.75 (121)	5.86 (149)
J	30	600	4.81 (122)	4.12 (105)	5.92 (150)
	60		4.81 (122)	4.12 (105)	5.92 (150)
M	30	600	2.41 (61)	2.81 (71)	5.14 (131)
R	30	250	3.00 (76)	3.03 (77)	5.33 (135)
	60		4.22 (107)	4.75 (121)	5.86 (149)
T	30	300	3.44 (87)	2.75 (70)	5.43 (138)
	60	300	3.44 (87)	2.75 (70)	5.43 (138)
	30	600	3.75 (95)	3.19 (81)	5.36 (136)
	60	600	4.87 (124)	2.94 (75)	5.68 (144)

15–75A, Reversing and Two-Speed—C65

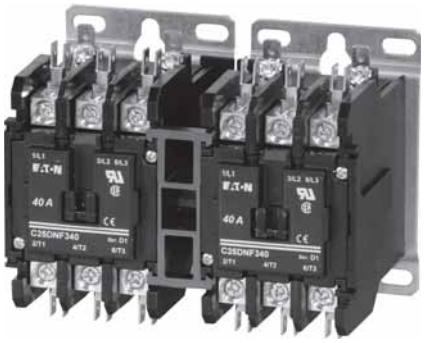

Contents

Description	*Page*
20–40A, Compact Single- and Two-Pole—C25	**V5-T4-4**
15–360A, Two-, Three- and Four-Pole—C25	**V5-T4-8**
15–40A, Three-Pole Fuse Block	**V5-T4-17**
15–75A, Reversing and Two-Speed—C65	
Catalog Number Selection	**V5-T4-21**
Product Selection	**V5-T4-21**

15–75A, Reversing and Two-Speed—C65

Product Description

C65 Reversing Contactors from Eaton's Electrical Sector are furnished with pressure plates and quick connect terminals as standard on 15, 25 and 30A devices and with box lugs and quick connect terminals on 40, 50, 60 and 75A.

Other terminal configurations are available—see Factory Installed Options on **Page V5-T4-13**. Reversing contactors will accept add-on auxiliary contacts on either side—order factory assembled or as kits for field installation. See **Page V5-T4-13**.

Standards and Certifications

- UL Recognized Components UL File #E-1491, Guide NLDX2
- CSA Certified Components File #LR353, Guide 380w-1.14 Class 3211 04
- CE

Catalog Number Selection

15–75A, Reversing and Two-Speed—C65

C65DND315 — Incomplete catalog number
A — Magnet coil suffix
X — Option code as necessary

When Ordering Specify

- Catalog number plus magnet coil suffix, see **Page V5-T4-22**
- Catalog numbers of accessory kits required, see Accessories, **Page V5-T4-11**
- Modify catalog number for any options required, see Options, **Page V5-T4-13**

Product Selection

C65 Reversing Contactor

Open Type Contactors—Unwired, Mechanically Interlocked Only

Ampere Rating				Maximum Motor (hp)		Maximum Motor (kW)			Open Type with Metal Mounting Plate	Open Type with DIN Rail Adapter
Inductive Full Load	Resistive per Pole	Line Voltage	Locked Rotor	Single-Phase	Three-Phase	Single-Phase	Three-Phase	Number of Poles	Catalog Number ①	Catalog Number ①
15	20	115	90	3/4	—	0.40	—	2	C65DND215_	C65DRD215_
		230	90	2	3	1.5	2.2	3	C65DND315_	C65DRD315_
		460	75	—	5	—	3.7		C65DND315_	C65DRD315_
		575	60	—	5	—	3.7		C65DND315_	C65DRD315_
25	35	115	150	2	—	1.5	—	2	C65DND225_	C65DRD225_
		230	150	3	7-1/2	2.2	5.5	3	C65DND325_	C65DRD325_
		460	125	—	10	—	7.5		C65DND325_	C65DRD325_
		575	100	—	10	—	7.5		C65DND325_	C65DRD325_
30	40	115	180	2	—	1.5	—	2	C65DND230_	C65DRD230_
		230	180	5	10	3.7	7.5	3	C65DND330_	C65DRD330_
		460	150	—	15	—	11		C65DND330_	C65DRD330_
		575	120	—	15	—	11		C65DND330_	C65DRD330_
40	50	115	240	3	—	2.2	—	2	C65DNF240_	C65DRF240_
		230	240	7-1/2	10	5.5	7.5	3	C65DNF340_	C65DRF340_
		460	200	—	20	—	15		C65DNF340_	C65DRF340_
		575	160	—	20	—	15		C65DNF340_	C65DRF340_
50	65	115	300	3	—	2.2	—	2	C65DNJ250_	C65DRJ250_
		230	300	10	15	7.5	11	3	C65DNJ350_	C65DRJ350_
		460	250	—	30	—	22		C65DNJ350_	C65DRJ350_
		575	200	—	30	—	22		C65DNJ350_	C65DRJ350_
60	75	115	360	5	—	3.7	—	2	C65FNF260_	—
		230	360	10	20	7.5	15	3	C65FNF360_	—
		460	300	—	40	—	30		C65FNF360_	—
		575	240	—	40	—	30		C65FNF360_	—
75	90	115	450	5	—	3.7	—	2	C65FNF275_	—
		230	450	15	20	11	18.5	3	C65FNF375_	—
		460	375	—	50	—	37		C65FNF375_	—
		575	300	—	50	—	37		C65FNF375_	—

Note

① Incomplete catalog number. Replace underscore (_) with magnet coil suffix from **Page V5-T4-22**.

Magnet Coil Suffix

Volts 60 Hz	50 Hz	Coil Suffix ①
12	12	**R**
24	24	**T**
110–120 ②	110–120 ②	**A**
208–240	208–240	**B**
240 ③	220	**J**
277	—	**H**
—	380–415	**L**
440–480	440–480	**C**
550–600	550–600	**D**

Magnet Coil Options

Description
Extra dual quick connect terminals ("U" shaped) for magnet coil terminals. To order, add Suffix Number **9** to the complete catalog number. Example: C65DND315A**9**.

Notes

① Class H AC coils available as option for 15A–50A contactor.
Add **2** before AC coil suffix letter.

② 104–120V 50/60 Hz for 60A, 75A.

③ Available through 50A.

25–60A, Single- and Three-Phase—A25, B25

Contents

Description	*Page*
25–60A, Single- and Three-Phase—A25, B25	
Product Selection	**V5-T4-24**
Accessories	**V5-T4-26**
Technical Data and Specifications	**V5-T4-27**
Trip Curves	**V5-T4-28**
Wiring Diagrams	**V5-T4-28**
Dimensions	**V5-T4-29**
15–45A, Single- and Three-Phase—A27, B27	**V5-T4-30**
15–75A, Single- and Three-Phase—A30, B30 and C440/***XT*** Electronic Overload Relay	**V5-T4-38**

25–60A, Single- and Three-Phase—A25, B25

Product Description

A25 and B25 Definite Purpose Starters from Eaton's Electrical Sector combine the features and flexibility of the C25 Definite Purpose Contactors and Freedom Series Bi-metallic Ambient Compensated Overload Relays mounted on a common mounting plate.

Features and Benefits

Overload Relay

- Selectable manual or automatic reset operation
- Interchangeable heater packs adjustable ±24% to match motor FLA and calibrated for use with 1.0 and 1.15 service factor motors
- Class 10 or 20 heater packs
- Bimetallic, ambient compensated operated. Trip free mechanism
- Electrically isolated NO-NC contacts (pull RESET button to test)
- Overload trip indication
- Shrouded or fingerproof terminals to reduce possibility of electrical shock
- Single-phase sensitivity

Standards and Certifications

- UL Recognized Components UL File #E-1491, Guide NLDX2
- CSA Certified Components File #LR353, Guide 380W-1.14 Class 3211 04

Catalog Number Selection

25–60A, Single- and Three-Phase—A25, B25

A25CNC30 — Incomplete catalog number

A — Magnet coil suffix

When Ordering Specify

- Catalog number plus magnet coil suffix, see **Page V5-T4-24**
  Example, order catalog number A25CNC30**A**
- Heater packs for specific FLA of motor, see **Pages V5-T4-26** and **V5-T4-27**

Product Selection

A25 Starter

Single- and Three-Phase Starters—Open Type

Ampere Rating			Maximum Motor (hp)		Maximum Motor (kW)		Single-Phase ①②		Three-Phase ①	
							Common Control	Separate Control	Common Control	Separate Control
Inductive Full Load	Line Voltage	Locked Rotor	Single-Phase	Three-Phase	Single-Phase	Three-Phase	Catalog Number ③	Catalog Number ③	Catalog Number ③	Catalog Number ③
25	115	150	2	—	1.5	—	**B25CNC25_**	**B25SNC25_**	**A25CNC25_**	**A25SNC25_**
	230	150	3	7-1/2	2.2	5.5	**B25CNC25_**	**B25SNC25_**	**A25CNC25_**	**A25SNC25_**
	460	125	—	10	—	7.5	**B25CNC25_**	**B25SNC25_**	**A25CNC25_**	**A25SNC25_**
	575	100	—	10	—	7.5	**B25CNC25_**	**B25SNC25_**	**A25CNC25_**	**A25SNC25_**
30	115	180	2	—	1.5	—	**B25CNC30_**	**B25SNC30_**	**A25CNC30_**	**A25SNC30_**
	230	180	5	10	3.7	7.5	**B25CNC30_**	**B25SNC30_**	**A25CNC30_**	**A25SNC30_**
	460	150	—	15	—	11	**B25CNC30_**	**B25SNC30_**	**A25CNC30_**	**A25SNC30_**
	575	120	—	15	—	11	**B25CNC30_**	**B25SNC30_**	**A25CNC30_**	**A25SNC30_**
40	115	240	3	—	2.2	—	**B25CNE40_**	**B25SNE40_**	**A25CNE40_**	**A25SNE40_**
	230	240	7-1/2	10	5.5	7.5	**B25CNE40_**	**B25SNE40_**	**A25CNE40_**	**A25SNE40_**
	460	200	—	20	—	15	**B25CNE40_**	**B25SNE40_**	**A25CNE40_**	**A25SNE40_**
	575	160	—	20	—	15	**B25CNE40_**	**B25SNE40_**	**A25CNE40_**	**A25SNE40_**
50	115	300	—	—	—	—	**N/A**	**N/A**	**A25CNE50_**	**A25SNE50_**
	230	300	—	15	—	11	**N/A**	**N/A**	**A25CNE50_**	**A25SNE50_**
	460	250	—	30	—	22	**N/A**	**N/A**	**A25CNE50_**	**A25SNE50_**
	575	200	—	30	—	22	**N/A**	**N/A**	**A25CNE50_**	**A25SNE50_**
60	115	360	—	—	—	—	**N/A**	**N/A**	**A25CNE60_**	**A25SNE60_**
	230	360	—	20	—	15	**N/A**	**N/A**	**A25CNE60_**	**A25SNE60_**
	460	300	—	40	—	30	**N/A**	**N/A**	**A25CNE60_**	**A25SNE60_**
	575	240	—	40	—	30	**N/A**	**N/A**	**A25CNE60_**	**A25SNE60_**

Magnet Coil Suffix

Voltage 60 Hertz	50 Hertz	Coil Suffix
AC ④		
12	12	**R**
24	24	**T**
110–120 ⑤	110–120 ⑤	**A**
208–240	208–240	**B**
240 ⑥	220	**J**
277	—	**H**
—	380–415	**L**
440–480	440–480	**C**
550–600	550–600	**D**

Voltage 60 Hertz	Coil Suffix
DC ⑦	
12	**1R**
24	**1T**
48	**1W**
120	**1A**

Notes

① Starters do not include heater packs. Select heater pack from tables, see **Pages V5-T4-26** and **V5-T4-27**.
② Set of three heater packs required for single-phase applications.
③ Incomplete catalog number. Replace underscore (_) with magnet coil suffix from table above.
④ Class H AC coils available as option for 15A–50A contactor. Add **2** before AC coil suffix letter.
⑤ 104–120V 50/60 Hz for 60A contactor.
⑥ Available through 50A.
⑦ Starters with DC coils include an early breaking auxiliary contact, C320KGD1. See **Page V5-T4-62** for more detail.

Overload Relay

General

Overload relays are provided to protect motors, motor control apparatus and motor-branch circuit conductors against excessive heating due to motor overloads and failure to start. This definition does not include: 1) motor circuits over 600 volts, 2) short-circuits, 3) ground faults and 4) fire pump control. (NEC Art. 430-31)

Time Current Characteristics

The time-current characteristics of an overload relay is an expression of performance which defines its operating time at various multiples of its current setting. Tests are run at Underwriters Laboratory (UL) in accordance with NEMA Standards and the NEC.

UL requires—

- When tested at 100 percent of its current rating, the overload relay shall trip ultimately
- When tested at 200 percent of its current rating, the overload relay shall trip in not more than 8 minutes
- When tested at 600 percent of its current rating, the overload relay shall trip in not more than 10 or 20 seconds, depending on the Class of the relay or heater packs

"Current Rating" is defined as the minimum current at which the relay will trip. Per NEC, an overload must ultimately trip at 125% of FLA (Full Load Amperes) current (heater) setting for a 1.15 service factor motor and 115% FLA for a 1.0 service factor motor. "Current Setting" is defined as the FLA of the motor and thus the overload heater pack setting.

Example: 600% of current rating is defined as 750% (600 x 1.25) of FLA current (heater) setting for a 1.15 service factor motor. A 10 ampere heater setting must trip in 20 seconds or less at 75 amperes motor current for a Class 20 relay.

Overload Relay Setting

FLA Dial Adjustment—

For motors having a 1.15 service factor, rotate the FLA adjustment dial to correspond to the motor's FLA rating. Estimate the dial position when the motor FLA falls between two letter values as shown in the example.

For motors having a 1.0 service factor, rotate the FLA dial single-half position counterclockwise (CCW).

Manual/Automatic Reset—

The overload relay is factory set at M for manual reset operation. For automatic reset operation, turn the reset adjustment dial to the A position as shown in the illustration.

Automatic reset is not intended for two-wire control devices.

Test for Trip Indication—

To test overload relay for trip indication when in manual reset, pull out the blue RESET button. An orange flag will appear indicating that the device has tripped. Push RESET button in to reset.

FLA Dial Adjustment

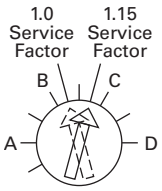

Example of 12.0 FLA setting for heater pack number H2011B showing position for 1.0 or 1.15 service factor motors.

Reset Adjustment Dial

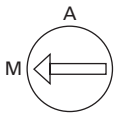

Example of setting for manual reset.

Replacement Overload with Connectors

Starter Size	Overload Part Number
25 and 30A	**10-7125**
40 and 50A	**10-7132**
60A	**10-7131**

Accessories

Contactor Accessories, see **Pages V5-T4-11** and **V5-T4-12**.

Locking Cover for Overload Relay

Snap-on transparent or opaque plastic panel for covering access port to the overload relay trip setting dial—helps prevent accidental or unauthorized changes to trip and reset setting.

Locking Cover

Locking Cover for Overload Relay

Description	Minimum Order Quantity (Std. Pkg.)	Catalog Number
Clear cover, no accessibility	50	**C320PC3**
Gray cover, no accessibility, with auto only nib	50	**C320PC4**
Gray cover, no accessibility, with manual only nib	50	**C320PC5**
Gray cover with FLA dial accessibility, A, B, C, D positions and auto only nib	50	**C320PC6**
Gray cover with FLA dial accessibility, A, B, C, D positions and manual only nib	50	**C320PC7**

Separate Enclosures

Separate Enclosures—NEMA 1

Application	Catalog Number
25 and 30A	**C799B11**
40, 50 and 60A	**C799B13**

Heater Packs

Fast Trip—Class 10 Heater Packs

Manual or Automatic Reset

Heater packs are shipped three to a carton.
Catalog numbers listed below are for three heater packs.

Fast Trip Ratings

Motor Full Load Ampere Rating ① Dial Position A	B	C	D	Catalog Number ② (Includes Three Heater Packs)
0.26	0.313	0.367	0.42	**H2101B-3**
0.384	0.464	0.543	0.623	**H2102B-3**
0.57	0.688	0.806	0.924	**H2103B-3**
0.846	1.02	1.2	1.37	**H2104B-3**
1.28	1.55	1.83	2.1	**H2105B-3**
1.92	2.33	2.74	3.15	**H2106B-3**
2.3	2.79	3.28	3.77	**H2107B-3**
3.38	4.1	4.82	5.54	**H2108B-3**
4.96	6.03	7.09	8.16	**H2109B-3**
7.07	8.58	10.1	11.6	**H2110B-3**
9.6	11.2	12.8	14.4	**H2111B-3**
14.4	17.5	20.7	23.8	**H2112B-3**
18.7	21.8	25	28.1	**H2113B-3**
23.5	27.3	31	34.8	**H2114B-3**
28.3	32.6	37	41.3	**H2115B-3**
36.6	42.3	48.1	53.8	**H2116B-3**
53.8	60.8	67.9	74.9	**H2117B-3**

Trip Curves, see **Page V5-T4-28**.

Notes

① For motor full load amperes between listed values, adjust dial clockwise for higher or counter-clockwise for lower motor currents. The currents listed are for 1.5 service factor motors. A position adjustment is provided for 1.0 service factor motors.

② Set of three heater packs are required for both single- and three-phase applications.

Standard Trip—Class 20 Heater Packs

Manual or Automatic Reset

Heater packs are shipped three to a carton.
Catalog numbers listed below are for three heater packs.

Standard Trip Ratings

Motor Full Load Ampere Rating ① Dial Position A	B	C	D	Catalog Number ② (Includes Three Heater Packs)
0.254	0.306	0.359	0.411	**H2001B-3**
0.375	0.452	0.53	0.607	**H2002B-3**
0.56	0.676	0.791	0.907	**H2003B-3**
0.814	0.983	1.15	1.32	**H2004B-3**
1.2	1.45	1.71	1.96	**H2005B-3**
1.79	2.16	2.53	2.9	**H2006B-3**
2.15	2.6	3.04	3.49	**H2007B-3**
3.23	3.9	4.56	5.23	**H2008B-3**
4.55	5.5	6.45	7.4	**H2009B-3**
6.75	8.17	9.58	11	**H2010B-3**
9.14	10.8	12.4	14	**H2011B-3**
14	16.9	19.9	22.8	**H2012B-3**
18.7	22.7	26.7	30.7	**H2013B-3**
23.5	28.5	33.5	38.5	**H2014B-3**
29	34	39.1	44.1	**H2015B-3**
39.6	45.5	51.5	57.4	**H2016B-3**
53.9	60.9	67.9	74.9	**H2017B-3**

Trip Curves, see **Page V5-T4-28**.

Technical Data and Specifications

Terminal Wire Sizes

Line Side (Contactor) ③

Terminal Type	Wire Range—Solid or Stranded Power Terminals	Coil Terminals
Screw/pressure plate	8–14 AWG	12–16 AWG
Box lug: 25–50A	4–14 AWG	12–16 AWG
Box lug: 60A	3–14 AWG	12–16 AWG

Power Terminals—Load—Cu Only (Stranded or Solid)

Terminal	Range	Torque Rating
25 and 30A	14–6 AWG	20 lb-in (14–10 AWG)
40, 50 and 60A	14–2 AWG	35 lb-in (14–10 AWG) 40 lb-in (8 AWG) 45 lb-in (6–4 AWG) 50 lb-in (3–2 AWG)

Control Terminals—Cu Only

12–16 AWG stranded, 12–14 AWG solid

Notes

① For motor full load amperes between listed values, adjust dial clockwise for higher or counter-clockwise for lower motor currents. The currents listed are for 1.5 service factor motors. A position adjustment is provided for 1.0 service factor motors.

② Set of three heater packs are required for both single- and three-phase applications.

③ Line side (contactor) torque ratings can be found on **Page V5-T4-14**.

Overload Relay UL/CSA Contact Ratings Control Circuit

AC Volts	120V	240V	480V	600V
NC Contact B600				
Make and break	30A	15A	7.5A	6A
Break	3A	1.5A	0.75A	0.6A
Continuous	5A	5A	5A	5A
NO Contact C600				
Make and break	15A	7.5A	3.375A	3A
Break	1.5A	0.75A	0.375A	0.3A
Continuous	2.5A	2.5A	2.5A	2.5A

Trip Curves

Bimetallic Ambient Compensated Overload Relay—25°C Open Rating

Class 10 Overload Relay

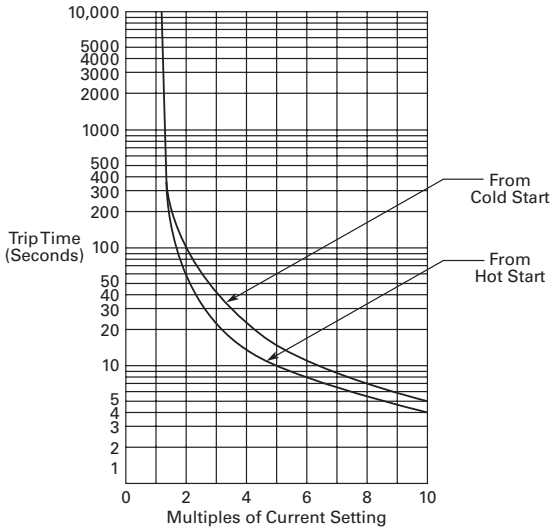

Class 20 Overload Relay

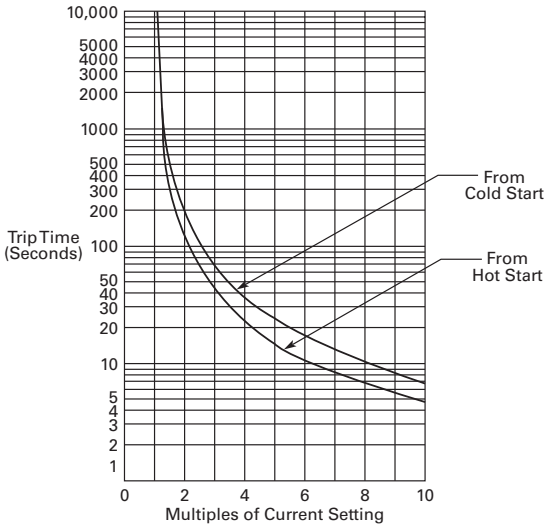

Wiring Diagrams

Single-Phase Connections

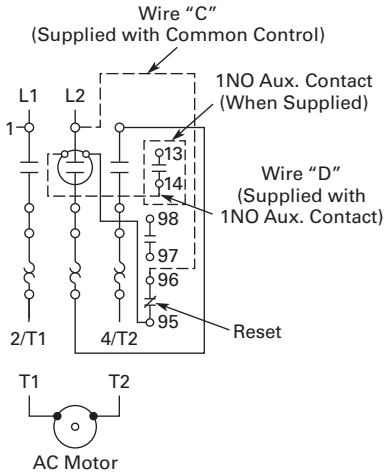

Three-Phase Connections

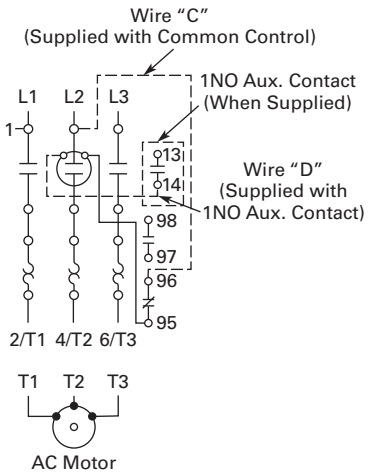

Dimensions

Approximate Dimensions in Inches (mm)

A25 and B25 Starers—Open Type

25 and 30 Ampere

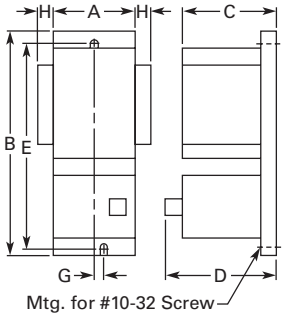

40, 50 and 60 Ampere

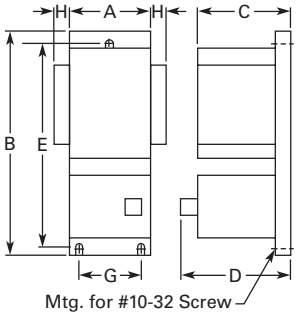

Dimensions and Shipping Weights

Ampere Size	Wide A	High B	Deep C	Deep D	Mounting E	Mounting G	Auxiliary Contact Adder H	Shipping Weight Lbs (kg)
25 and 30	2.50 (64.0)	7.14 (181.0)	3.56 (90.4)	3.69 (93.7)	6.55 (166.0)	0.20 (5.1)	0.54 (13.7)	1.8 (0.8)
40	2.56 (65.0)	8.08 (205.0)	3.50 (89.0)	3.66 (93.0)	7.50 (190.5)	2.00 (51.0)	0.54 (13.7)	1.8 (0.8)
50 and 60	2.56 (65.0)	8.08 (205.0)	4.15 (105.0)	3.66 (93.0)	7.50 (190.5)	2.00 (51.0)	0.54 (13.7)	3.6 (1.6)

15–45A, Single- and Three-Phase—A27, B27

Contents

Description	*Page*
25–60A, Single- and Three-Phase—A25, B25	**V5-T4-23**
15–45A, Single- and Three-Phase—A27, B27	
Product Selection	**V5-T4-31**
Renewal Parts	**V5-T4-33**
Technical Data and Specifications	**V5-T4-33**
Trip Curve	**V5-T4-36**
Wiring Diagrams	**V5-T4-36**
Dimensions	**V5-T4-37**
15–75A, Single- and Three-Phase—A30, B30 and C440/***XT*** Electronic Overload Relay	**V5-T4-38**

15–45A, Single- and Three-Phase—A27, B27

Product Description

A27 and B27 Definite Purpose Starters from Eaton's Electrical Sector combine the features and flexibility of the C25 Definite Purpose Contactors and ***XT*** Series Bi-metallic Ambient Compensated Overload Relays.

Features and Benefits

- Selectable manual or automatic reset operation
- Class 10 trip class
- Bimetallic, ambient compensated operated. Trip free mechanism
- Electrically isolated NO-NC contacts (pull TEST button to test)
- Shrouded or fingerproof terminals to reduce possibility of electrical shock
- Single-phase sensitivity

Standards and Certifications

- UL Recognized Components UL File #E-1491, Guide NLDX2
- CSA Certified Components File #LR353, Guide 3 80W-1.14 Class 3211 04
- IEC/EN 60947
- VDE 0660
- UL
- CSA
- CE

Catalog Number Selection

15–45A, Single- and Three-Phase—A27, B27

A27CNE30	A	040
Incomplete catalog number	Magnet coil suffix	Overload relay suffix

When Ordering Specify

- Catalog number plus magnet coil suffix plus overload relay suffix, see **Page V5-T4-32**
  Example, order catalog number A27CNE30**A040**

Product Selection

A27 Starter

Three-Phase Starter—Open Type

Ampere Rating					Common Control		Separate Control	
					Metal Mounting Plate	DIN Rail Adapter	Metal Mounting Plate	DIN Rail Adapter
Inductive Full Load	Line Voltage	Locked Rotor	Maximum Motor (hp)	Maximum Motor (kW)	Catalog Number ①	Catalog Number ①	Catalog Number ①	Catalog Number ①
15	115	90	—	—	**A27CNC15_**	**A27CRC15_**	**A27SNC15_**	**A27SRC15_**
	230	90	3	2.2	**A27CNC15_**	**A27CRC15_**	**A27SNC15_**	**A27SRC15_**
	460	75	5	3.7	**A27CNC15_**	**A27CRC15_**	**A27SNC15_**	**A27SRC15_**
	575	60	5	3.7	**A27CNC15_**	**A27CRC15_**	**A27SNC15_**	**A27SRC15_**
25	115	150	—	—	**A27CNC25_**	**A27CRC25_**	**A27SNC25_**	**A27SRC25_**
	230	150	7-1/2	5.5	**A27CNC25_**	**A27CRC25_**	**A27SNC25_**	**A27SRC25_**
	460	125	10	7.5	**A27CNC25_**	**A27CRC25_**	**A27SNC25_**	**A27SRC25_**
	575	100	10	7.5	**A27CNC25_**	**A27CRC25_**	**A27SNC25_**	**A27SRC25_**
30	115	180	—	—	**A27CNE30_**	**A27CRE30_**	**A27SNE30_**	**A27SRE30_**
	230	180	10	7.5	**A27CNE30_**	**A27CRE30_**	**A27SNE30_**	**A27SRE30_**
	460	150	15	11	**A27CNE30_**	**A27CRE30_**	**A27SNE30_**	**A27SRE30_**
	575	120	15	11	**A27CNE30_**	**A27CRE30_**	**A27SNE30_**	**A27SRE30_**
40	115	240	—	—	**A27CNE40_**	**A27CRE40_**	**A27SNE40_**	**A27SRE40_**
	230	240	10	7.5	**A27CNE40_**	**A27CRE40_**	**A27SNE40_**	**A27SRE40_**
	460	200	20	15	**A27CNE40_**	**A27CRE40_**	**A27SNE40_**	**A27SRE40_**
	575	160	20	15	**A27CNE40_**	**A27CRE40_**	**A27SNE40_**	**A27SRE40_**
45	115	270	—	—	**A27CNE45_**	**A27CRE45_**	**A27SNE45_**	**A27SRE45_**
	230	270	15	11	**A27CNE45_**	**A27CRE45_**	**A27SNE45_**	**A27SRE45_**
	460	225	30	22	**A27CNE45_**	**A27CRE45_**	**A27SNE45_**	**A27SRE45_**
	575	180	30	22	**A27CNE45_**	**A27CRE45_**	**A27SNE45_**	**A27SRE45_**

Note

① Incomplete catalog number. Replace underscore (_) with magnet coil suffix and overload relay suffix from **Page V5-T4-32**.

Single-Phase Starter—Open Type, B27

Ampere Rating Inductive Full Load	Line Voltage	Locked Rotor	Maximum Motor (hp)	Maximum Motor (kW)	Common Control Metal Mounting Plate Catalog Number ①	Common Control DIN Rail Adapter Catalog Number ①	Separate Control Metal Mounting Plate Catalog Number ①	Separate Control DIN Rail Adapter Catalog Number ①
15	115	90	3/4	0.4	**B27CNC15_**	**B27CRC15_**	**B27SNC15_**	**B27SRC15_**
	230	90	2	1.5	**B27CNC15_**	**B27CRC15_**	**B27SNC15_**	**B27SRC15_**
	460	75	—	—	**B27CNC15_**	**B27CRC15_**	**B27SNC15_**	**B27SRC15_**
	575	60	—	—	**B27CNC15_**	**B27CRC15_**	**B27SNC15_**	**B27SRC15_**
25	115	150	2	1.5	**B27CNC25_**	**B27CRC25_**	**B27SNC25_**	**B27SRC25_**
	230	150	3	2.2	**B27CNC25_**	**B27CRC25_**	**B27SNC25_**	**B27SRC25_**
	460	125	—	—	**B27CNC25_**	**B27CRC25_**	**B27SNC25_**	**B27SRC25_**
	575	100	—	—	**B27CNC25_**	**B27CRC25_**	**B27SNC25_**	**B27SRC25_**
30	115	180	2	1.5	**B27CNE30_**	**B27CRE30_**	**B27SNE30_**	**B27SRE30_**
	230	180	5	3.7	**B27CNE30_**	**B27CRE30_**	**B27SNE30_**	**B27SRE30_**
	460	150	—	—	**B27CNE30_**	**B27CRE30_**	**B27SNE30_**	**B27SRE30_**
	575	120	—	—	**B27CNE30_**	**B27CRE30_**	**B27SNE30_**	**B27SRE30_**
40	115	240	3	2.2	**B27CNE40_**	**B27CRE40_**	**B27SNE40_**	**B27SRE40_**
	230	240	7-1/2	5.5	**B27CNE40_**	**B27CRE40_**	**B27SNE40_**	**B27SRE40_**
	460	200	—	—	**B27CNE40_**	**B27CRE40_**	**B27SNE40_**	**B27SRE40_**
	575	160	—	—	**B27CNE40_**	**B27CRE40_**	**B27SNE40_**	**B27SRE40_**
45	115	270	3	2.2	**B27CNE45_**	**B27CRE45_**	**B27SNE45_**	**B27SRE45_**
	230	270	7-1/2	7.5	**B27CNE45_**	**B27CRE45_**	**B27SNE45_**	**B27SRE45_**
	460	225	—	—	**B27CNE45_**	**B27CRE45_**	**B27SNE45_**	**B27SRE45_**
	575	180	—	—	**B27CNE45_**	**B27CRE45_**	**B27SNE45_**	**B27SRE45_**

Magnet Coil Suffix

Voltage 60 Hertz	50 Hertz	Coil Suffix
AC ②		
12	12	**R**
24	24	**T**
110–120	110–120	**A**
208–240	208–240	**B**
240 ③	220	**J**
277	—	**H**
—	380–415	**L**
440–480	440–480	**C**
550–600	550–600	**D**

Voltage 60 Hertz	Coil Suffix
DC ④	
12	**1R**
24	**1T**
48	**1W**
120	**1A**

Overload Relay Suffix

Motor Full Load Amperes	Suffix Code	For use with Contactor Ampere Range
Frame C		
0.1–0.16	**P16**	15–25A
0.16–0.24	**P24**	15–25A
0.24–0.4	**P40**	15–25A
0.4–0.6	**P60**	15–25A
0.6–1	**001**	15–25A
1–1.6	**1P6**	15–25A
1.6–2.4	**2P4**	15–25A
2.4–4	**004**	15–25A
4–6	**006**	15–25A
6–10	**010**	15–25A
10–16	**016**	15–25A
16–24	**024**	15–25A
24–32	**032**	15–25A
Frame D		
6–10	**010**	30–45A
10–16	**016**	30–45A
16–24	**024**	30–45A
24–40	**040**	30–45A
40–57	**057**	30–45A

Notes

① Incomplete catalog number. Replace underscore (_) with magnet coil suffix and overload relay suffix from tables above.
② Class H AC coils available as option. Add **2** before AC coil suffix letter.
③ Available through 45A.
④ Starters with DC coils include an early breaking auxiliary contact, C320KGD1. See **Page V5-T4-62** for more detail.

Renewal Parts

Overload Relays

Motor Full Load Amperes	Suffix Code	For use with Contactor Ampere Range	Overload Relay Catalog Number
Frame C			
0.1–0.16	**P16**	15–25A	**XTOBP16CC1DP**
0.16–0.24	**P24**	15–25A	**XTOBP24CC1DP**
0.24–0.4	**P40**	15–25A	**XTOBP40CC1DP**
0.4–0.6	**P60**	15–25A	**XTOBP60CC1DP**
0.6–1	**001**	15–25A	**XTOB001CC1DP**
1–1.6	**1P6**	15–25A	**XTOB1P6CC1DP**
1.6–2.4	**2P4**	15–25A	**XTOB2P4CC1DP**
2.4–4	**004**	15–25A	**XTOB004CC1DP**
4–6	**006**	15–25A	**XTOB006CC1DP**
6–10	**010**	15–25A	**XTOB010CC1DP**
10–16	**016**	15–25A	**XTOB016CC1DP**
16–24	**024**	15–25A	**XTOB024CC1DP**
24–32	**032**	15–25A	**XTOB032CC1DP**
Frame D			
6–10	**010**	30–45A	**XTOB010DC1DP**
10–16	**016**	30–45A	**XTOB016DC1DP**
16–24	**024**	30–45A	**XTOB024DC1DP**
24–40	**040**	30–45A	**XTOB040DC1DP**
40–57	**057**	30–45A	**XTOB057DC1DP**

Technical Data and Specifications

Terminal Wire Sizes

Line Side (Contactor) ①	Wire Range—Solid or Stranded	
Terminal Type	**Power Terminals**	**Coil Terminals**
Screw/pressure plate	8–14 AWG	12–16 AWG
Box lug: 15–45A	4–14 AWG	12–16 AWG

Note

① Line side (contactor) torque ratings can be found on **Page V5-T4-14**.

Power Terminals—Load—Cu Only (Stranded or Solid)

Terminal	Range	Torque Rating
15 and 25A	14–8 AWG	16 lb-in (14–8 AWG)
30, 40 and 45A	14–2 AWG	31 lb-in (14–2 AWG)
Control Terminals—Cu Only		
12–16 AWG stranded, 12–14 AWG solid		

Overload Relays

These tripping characteristics are the mean values of the spread at 20°C ambient temperature in a cold state.

Tripping time depends on response current. With devices at operating temperature, the tripping time of the overload relay reduces to approximately 25% of the read off value. Specific characteristics for each individual setting range can be found in MN03402001E.

Overload Relays

Description	XTOB ... CC1 Specification	XTOB ... DC1 Specification
General		
Climatic proofing	Damp heat, constant, to IEC 60068-2-78; Damp heat, cyclic, to IEC 60 068-2-30	Damp heat, constant, to IEC 60068-2-78; Damp heat, cyclic, to IEC 60 068-2-30
Ambient temperature range ①	–25° to 50°C [–13° to 122°F]	–25° to 50°C [–13° to 122°F]
Temperature compensation	Continuous	Continuous
Mechanical shock resistance (IEC/EN 60068-2-27)		
Half-sinusoidal shock 10 ms	10g	10g
Degree of protection	IP20	IP20
Protection against direct contact when actuated from front (IEC 536)	Finger and back of hand proof	Finger and back of hand proof
Insulation voltage (U_i) Vac	690	690
Overvoltage category/pollution degree	III/3	III/3
Impulse withstand voltage (U_{imp}) Vac	6000	6000
Operational voltage (U_e) Vac	690	690
Safe isolation to VDE 0106 Part 101 and Part 101/A1		
Between auxiliary contacts and main contacts (Vac)	440	440
Between main contacts (Vac)	440	440
Overload relay setting range	0.1–32A	6–75A
Temperature compensation residual error >20°C (%/K)	≤0.25	≤0.25
Current heat loss (3 conductors)		
Lower value of setting range, W	2.5	3
Upper value of setting range, W	6	7.5
Terminal capacity	2 x (1–6)	2 x (1–6)
Solid, mm^2	2 x (1–4)	1 x 25
Flexible with ferrule, mm^2	2 x (1–6) ②	2 x (1–10) ③
Solid or stranded, AWG	14-8	14-2
Terminal screw	M4	M6
Tightening torque Nm (lb-in)	1.8 (16)	3.5 (31)
Tools		
Pozidrive screwdriver	Size 2	Size 2
Standard screwdriver	1 x 6	1 x 6

Notes

① Ambient temperature operating range to IEC/EN 60947, PTB: –5° to 50°C [23° to 122°F].
② 6 mm^2 flexible with ferrules to DIN 46228.
③ Main contact terminal capacity, solid and stranded conductors with ferrules: When using two conductors use identical cross-section.

Overload Relays, continued

Description	XTOB ... CC1 Specification	XTOB ... DC1 Specification
Auxiliary and Control Circuit Connections		
Impulse withstand voltage (U_{imp}) Vac	6000	6000
Overvoltage category/pollution degree	III/3	III/3
Terminal capacity		
Solid, mm²	2 x (0.75–4)	2 x (0.75–4)
Flexible with ferrule, mm²	2 x (0.75–2.5)	2 x (0.75–2.5)
Solid or stranded, AWG	2 x (18–12)	2 x (18–12)
Terminal screw	M3.5	M3.5
Tightening torque Nm (lb-in)	0.8–1.3 (7–11.5)	0.8–1.3 (7–11.5)
Tools		
Pozidrive screwdriver	Size 2	Size 2
Standard screwdriver	1 x 6	1 x 6
Auxiliary circuit rated insulation voltage (U_i) Vac	500	500
Rated operational voltage (U_e) Vac	500	500
Safe isolation to VDE 0106 Part 101 and Part 101/A1		
Between the auxiliary contacts (Vac)	240	240
Conventional thermal current, I_{th}	6	6
Rated operational current—AC-15		
NO contact		
120V	1.5	1.5
240V	1.5	1.5
415V	0.5	0.5
500V	0.5	0.5
NC contact		
120V	1.5	1.5
240V	1.5	1.5
415V	0.9	0.9
500V	0.8	0.8
Rated operational current—DC-13 L/R ≤15 ms ①		
NO contact		
24V	0.9	0.9
60V	0.75	0.75
110V	0.4	0.4
220V	0.2	0.2
Short-circuit rating without welding maximum fuse, A gG/gL	6	6

Note

① Rated operational current: Making and breaking conditions to DC-13, L/R constant as stated.

Trip Curve

Overload Relay

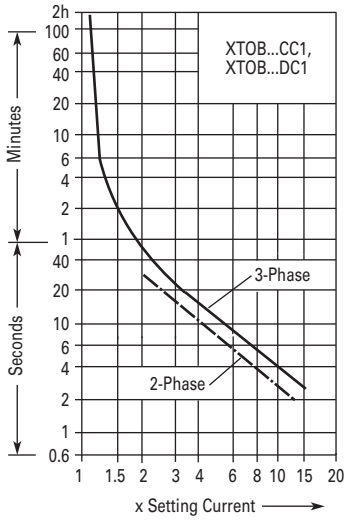

Wiring Diagrams

Single-Phase Connections

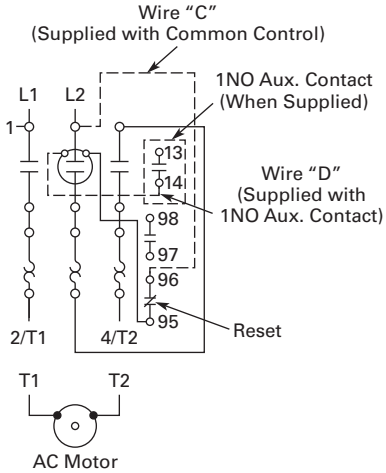

Three-Phase Connections

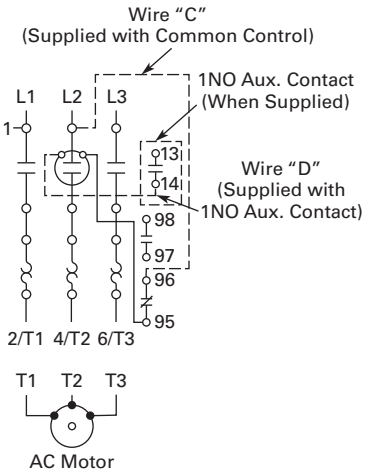

Dimensions

Approximate Dimensions in Inches (mm)

A27 and B27 Starters—Open Type

15 and 25 Ampere

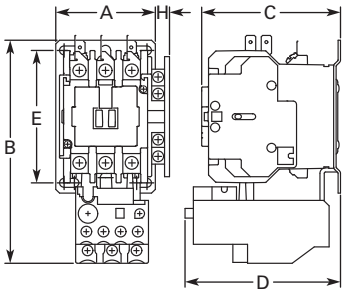

30, 40 and 45 Ampere

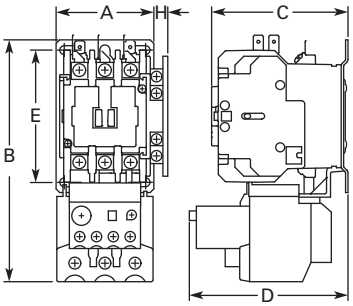

Dimensions and Shipping Weights

Ampere Size	Wide A	High B	Deep C	Deep D	Mounting E	Mounting G	Auxiliary Contact Adder H	Shipping Weight Lbs (kg)
15 and 25 (metal plate)	2.40 (61.0)	5.50 (139.0)	3.35 (85.0)	3.70 (94.0)	3.13 (82.6)	—	0.54 (13.7)	1.6 (0.7)
15 and 25 (DIN rail mount)	2.23 (56.5)	5.20 (133.0)	3.35 (85.0)	3.70 (94.0)	—	—	0.54 (13.7)	1.6 (0.7)
30, 40 and 45 (metal plate)	2.40 (61.0)	6.00 (152.0)	3.35 (85.0)	3.90 (98.0)	3.13 (82.6)	—	0.54 (13.7)	1.11 (0.9)
30, 40 and 45 (DIN rail mount)	2.23 (56.5)	5.70 (145.0)	3.35 (85.0)	3.90 (98.0)	—	—	0.54 (13.7)	1.11 (0.9)

15–75A, Single- and Three-Phase—A30, B30 and C440/*XT* Electronic Overload Relay

Contents

Description	*Page*
25–60A, Single- and Three-Phase—A25, B25	**V5-T4-23**
15–45A, Single- and Three-Phase—A27, B27	**V5-T4-30**
15–75A, Single- and Three-Phase—A30, B30 and C440/***XT*** Electronic Overload Relay	
Standards and Certifications	**V5-T4-39**
Catalog Number Selection	**V5-T4-39**
Product Selection	**V5-T4-40**
Accessories	**V5-T4-42**
Technical Data and Specifications	**V5-T4-43**
Wiring Diagrams	**V5-T4-45**

15–75A, Single- and Three-Phase—A30, B30 and C440/*XT* Electronic Overload Relay

Product Description

A30 and B30 Starters

A30 and B30 Definite Purpose Starters from Eaton's Electrical Sector combine the features and flexibility of the C25 Definite Purpose Contactors and C440 Electronic Overload Relays.

C440 Overload

C440 is the most compact, high-featured, economical product in its class.

C440 is a self-powered electronic overload relay available up to 100A as a self contained unit. With external CTs, C440 can protect motor up to 1500 FLA. Available add-on accessories include remote reset capability and communication modules with I/O for DeviceNet, PROFIBUS, and Modbus.

Features

A30 and B30 Starters

- Standard version: selectable trip class (10A, 10, 20, 30) with selectable manual or auto reset
- Current adjustment range: 5:1
- Self-powered design—will accept AC voltages from 12 to 690V 50/60 Hz
- Ambient temperature compensation
- Low heat generation
- Phase loss protection
- Phase unbalance protection
- Electrically isolated 1NO-1NC contacts (push-to-test)
- Trip status indicator

C440 Overload

- Reliable, accurate, electronic motor protection
- Easy to select, install and maintain
- Compact size
- Flexible, intelligent design
- Global product offering—available with NEMA, IEC and DP power control

Motor Control

- Two B600 alarm (NO) and fault (NC) contacts
- Test/Trip button

Motor Protection

- Thermal overload
- Phase loss
- Selectable (ON/OFF) phase unbalance
- Selectable (ON/OFF) ground fault

User Interface

- Large FLA selection dial
- Trip status indicator
- Operating mode LED
- DIP switch selectable trip class, phase unbalance and ground fault
- Selectable Auto/Manual reset

Feature Options

- Remote reset
  - 120 Vac
  - 24 Vac
  - 24 Vdc
- Tamper-proof cover

Standards and Certifications

A30 and B30 Starters

- UL Listed Components
- CSA Certified Components
- IEC EN 60947-4-1, EN 60947-5-1
- CE Certified Components
- CCC Certified Components
- RoHS Certified Components

Catalog Number Selection

A30 and B30 Definite Purpose Starters

A 30 C N C 25 A X 5E 005

Designation
- **A** = Three-phase starter
- **B** = Single-phase starter

Type
- **30** = Non-reversing

Control
- **C** = Common control
- **S** = Separate control

Enclosure Type
- **N** = Open with metal mounting plate
- **R** = Open with DIN rail mounting adapter (two- and three-pole, 15–50A contactors only)
- **G** = NEMA Type 1 enclosed

Power Terminals

15–40A Contactor
- **A** = Binding head screws without quick connect terminals
- **B** = Binding head screws with quick connect terminals
- **C** = Pressure plate without quick connect terminals
- **D** = Pressure plate with quick connect terminals
- **E** = Lugs without quick connect terminals
- **F** = Lugs with quick connect terminals

50–75A Contactor
- **E** = Lugs without quick connect terminals
- **F** = Lugs with quick connect terminals

Current Ratings

25 = 25A	**45** = 45A
30 = 30A	**60** = 60A
40 = 40A	**75** = 75A

AC Coil Codes

T = 24V	**D** = 550/600V
A = 110/120V	**H** = 277V
B = 208/240V	**L** = 380/415V
C = 440/480V	**J** = 240V/60 Hz; 220V/50 Hz (Available through 50A)

Auxiliary Contacts (Side Mount)
- **A** = 1NO pressure plate
- **B** = 1NC pressure plate
- **C** = 1NO-1NC pressure plate
- **D** = 2NO pressure plate
- **E** = 2NC pressure plate
- **F** = 1NO pressure plate and QC
- **G** = 1NC pressure plate and QC
- **H** = 1NO-1NC pressure plate and QC
- **J** = 2NO pressure plate and QC
- **K** = 2NC pressure plate and QC
- **L** = 1NO-1NC snap switch QC only
- **M** = 2NO-2NC snap switch QC only
- **X** = None

OLR Model Designation
- **5C** = C440 with ground fault
- **5E** = Standard C440 OLR SEL Reset, SEL Class

Overload Range

DP Starters with C440 Electronic Overload

15A–75A Contactor

005 = 1–5A	**045** = 9–45A
020 = 4–20A	**100** = 20–100A

Product Selection

When Ordering Specify

- Catalog number plus AC coil code, auxiliary contact code, OLR model designation and overload range code, see below

A30 Starter

Three-Phase Starters—Open Type A30 with C440 Electronic Overload

Ampere Rating					Common Control		Separate Control	
Inductive Full Load	Line Voltage	Locked Rotor	Maximum Motor (hp)	Maximum Motor (kW)	Metal Mounting Plate Catalog Number ①	DIN Rail Adapter Catalog Number ①	Metal Mounting Plate Catalog Number ①	DIN Rail Adapter Catalog Number ①
25	115	150	—	—	**A30CNC25_**	**A30CRC25_**	**A30SNC25_**	**A30SRC25_**
	230	150	7-1/2	5-1/2				
	460	125	10	7-1/2				
	575	100	10	7-1/2				
30	115	180	—	—	**A30CNE30_**	**A30CRE30_**	**A30SNE30_**	**A30SRE30_**
	230	180	10	7-1/2				
	460	150	15	11				
	575	120	15	11				
40	115	240	—	—	**A30CNE40_**	**A30CRE40_**	**A30SNE40_**	**A30SRE40_**
	230	240	10	7-1/2				
	460	200	20	15				
	575	160	20	15				
45	115	300	—	—	**A30CNE45_**	**A30CRE45_**	**A30SNE45_**	**A30SRE45_**
	230	300	15	11				
	460	250	30	22				
	575	200	30	22				
60	115	360	—	—	**A30CNE60_**	—	**A30SNE60_**	—
	230	360	20	15				
	460	300	40	30				
	575	340	40	30				
75	115	450	—	—	**A30CNE75_**	—	**A30SNE75_**	—
	230	450	20	18-1/2				
	460	375	50	37				
	575	300	50	37				

Note

① Incomplete catalog number. Replace underscore (_) with suffix, see **Page V5-T4-41**.

When Ordering Specify

- Catalog number plus AC coil code, auxiliary contact code, OLR model designation and overload range code, see below

Single-Phase Starters—Open Type, B30 with C440 Electronic Overload

Ampere Rating					Common Control		Separate Control	
Inductive Full Load	Line Voltage	Locked Rotor	Maximum Motor (hp)	Maximum Motor (kW)	Metal Mounting Plate Catalog Number ①	DIN Rail Adapter Catalog Number ①	Metal Mounting Plate Catalog Number ①	DIN Rail Adapter Catalog Number ①
25	115	150	2	1.5	**B30CNC25_**	**B30CRC25_**	**B30SNC25_**	**B30SRC25_**
	230	150	3	2.2				
	460	125	—	—				
	575	100	—	—				
30	115	180	2	1.5	**B30CNE30_**	**B30CRE30_**	**B30SNE30_**	**B30SRE30_**
	230	180	5	3.7				
	460	150	—	—				
	575	120	—	—				
40	115	240	3	2.2	**B30CNE40_**	**B30CRE40_**	**B30SNE40_**	**B30SRE40_**
	230	240	7-1/2	5.5				
	460	200	—	—				
	575	160	—	—				
45	115	300	3	2.2	**B30CNE45_**	**B30CRE45_**	**B30SNE45_**	**B30SRE45_**
	230	300	10	7.5				
	460	250	—	—				
	575	200	—	—				

C440/*XT* Electronic Overload Relay

C440 Electronic Overload Relay for Integrated Use with DP Contactors

C440 Overload Relay for Integrated Use with DP Contactors by Feature Set

FLA Range (Amps)	DP Contactor Rating	Suffix Code	Overload Relay Catalog Number (Standard)	Overload Relay Catalog Number (Ground Fault)
Frame D				
1–5	25–50A	**005**	**C440A1A005SDD**	**C440A2A005SDD**
4–20	25–50A	**020**	**C440A1A020SDD**	**C440A2A020SDD**
9–45	25–50A	**045**	**C440A1A045SDD**	**C440A2A045SDD**
Frame F				
20–100	60–75A	**100**	**C440B1A100SDF**	**C440B2A100SDF**

Note

① Incomplete catalog number. Replace underscore (_) with suffix, see table above.

Accessories

CT Kits

Accessories

	Description	Catalog Number
Safety Cover	**Safety Cover**	
	Clear Lexan cover that mounts on top of the FLA dial and DIP switches when closed.	**ZEB-XSC**
Reset Bar	**Reset Bar**	
	Assembles to the top of the overload to provide a larger target area for door mounted reset operators.	**ZEB-XRB**
Remote Reset	**Remote Reset**	
	Remote reset module (24 Vdc) ①	**C440-XCOM**
	Remote reset module (120 Vac) ①	**ZEB-XRR-120**
	Remote reset module (24 Vac) ①	**ZEB-XRR-24**

Note

① Customer can wire remote mounted button to reset module (that is, 22 mm pushbutton, catalog number M22-D-B-GB14-K10).

Technical Data and Specifications

Electronic Overload Relays up to 1500A

Description	Specification 45 mm	55 mm
Electrical Ratings	**Range**	**Range**
Operating voltage (three-phase) and frequency	690 Vac (60/50 Hz)	690 Vac (60/50 Hz)
FLA Range		
	0.33–1.65A 1–5A 4–20A 9–45A	20–100A
Use with Contactors		
XT IEC frames	B, C, D	F, G
Freedom NEMA sizes	00, 0, 1, 2	3
DP contactors	25–50A	60, 75A
Trip Class		
	10A, 10, 20, 30 Selectable	10A, 10, 20, 30 Selectable
Motor Protection		
Thermal overload setting	1.05 x FLA: does not trip 1.15 x FLA: overload trip	1.05 x FLA: does not trip 1.15 x FLA: overload trip
Feature	**Range**	**Range**
Phase loss	Fixed threshold 50%	Fixed threshold 50%
Phase unbalance (selectable: enable/disable)	Fixed threshold 50%	Fixed threshold 50%
Ground fault (selectable: enable/disable)	50% of FLA dial setting >150% = 2 sec >250% = 1 sec	50% of FLA dial setting >150% = 2 sec >250% = 1 sec
Reset	Manual/automatic	Manual/automatic
Indicators		
Trip status	Orange flag	Orange flag
Mode LED	One flash: Overload operating properly Two flashes: Current is above FLA dial setting—pending trip	One flash: Overload operating properly Two flashes: Current is above FLA dial setting—pending trip
Options		
Remote reset	Yes	Yes
Reset bar	Yes	Yes
Communication expansion module	Yes	Yes
Communication adapter	Yes	Yes
Capacity		
Load terminals		
Terminal capacity	12–10 AWG (4–6 mm^2) 8–6 AWG (6–16 mm^2)	6–1 AWG (16–50 mm^2)
Tightening torque	20–25 lb-in (2.3–2.8 Nm) 25–30 lb-in (2.8–3.4 Nm)	25–30 lb-in (2.8–3.4 Nm)
Input, auxiliary contact and remote reset terminals		
Terminal capacity	2 x (18–12) AWG	2 x (18–12) AWG
Tightening torque	5.3 lb-in (0.8–1.2 Nm)	5.3 lb-in (0.8–1.2 Nm)
Voltages		
Insulation voltage U_i (three-phase)	690 Vac	690 Vac
Insulation voltage U_i (control)	500 Vac	500 Vac
Rated impulse withstand voltage	6000 Vac	6000 Vac
Overvoltage category/pollution degree	III/3	III/3

Electronic Overload Relays up to 1500A, continued

Description	Specification 45 mm	55 mm
Auxiliary and Control Circuit Ratings		
Conventional thermal continuous current	5A	5A
Rated operational current—IEC AC-15		
Make contact (1800 VA)		
120V	15A	15A
240V	15A	15A
415V	0.5A	0.5A
500V	0.5A	0.5A
Break contact (180 VA)		
120V	1.5A	1.5A
240V	1.5A	1.5A
415V	0.9A	0.9A
500V	0.8A	0.8A
IEC DC-13 (L/R F 15 ms1)		
0–250V	1.0A	1.0A
Rated operational current—UL B600		
Make contact (3600 VA)		
120V	30A	30A
240V	15A	15A
480V	7.5A	7.5A
600V	6A	6A
Break contact (360 VA)		
120V	3A	3A
240V	1.5A	1.5A
480V	0.75A	0.75A
600V	0.6A	0.6A
R300—Vdc ratings (28 VA)		
0–120V	0.22A	0.22A
250V	0.11A	0.11A
Short-Circuit Rating without Welding		
Maximum fuse	6A gG/gL	6A gG/gL
Environmental Ratings		
Ambient temperature (operating)	–13° to 149°F (–25° to 65°C)	–13° to 149°F (–25° to 65°C)
Ambient temperature (storage)	–40° to 185°F (–40° to 85°C)	–40° to 185°F (–40° to 85°C)
Operating humidity UL 991 (H3)	5% to 95% non-condensing	5% to 95% non-condensing
Altitude (no derating) NEMA ICS1	2000m	2000m
Shock (IEC 600068-2-27)	15g any direction	15g any direction
Vibration (IEC 60068-2-6)	3g any direction	3g any direction
Pollution degree per IEC 60947-4-1	3 for product (2 for pcb)	3 for product (2 for pcb)
Ingress protection	IP20	IP20
Protection against direct contact when actuated from front (IEC 536)	Finger- and back-of-hand proof	Finger- and back-of-hand proof
Mounting position	Any	Any
Climatic proofing	Damp heat, constant to IEC 60068-2-30	Damp heat, constant to IEC 60068-2-30

Electronic Overload Relays up to 1500A, continued

Description	Specification 45 mm	55 mm
Electrical/EMC		
Radiated emissions IEC 60947-4-1-Table 15 EN 55011 (CISPIR 11) Group 1, Class A, ISM	30 MHz to 1000 MHz	30 MHz to 1000 MHz
Conducted emissions IEC 60947-4-1-Table 14 EN 55011 (CISPIR 11) Group 1; Class ISM	0.15 MHz to 30 MHz	0.15 MHz to 30 MHz
ESD immunity IEC 60947-4-1 (Table 13)	±8 kV air, ±6 kV contact	±8 kV air, ±6 kV contact
Radiated immunity IEC 60947-4-1 IEC 61000-4-3	10V/m 80 MHz–1000 MHz 3V/m from 1.4 to 2.7 GHz 80% amplitude modulated 1 kHz sine wave	10V/m 80 MHz–1000 MHz 3V/m from 1.4 to 2.7 GHz 80% amplitude modulated 1 kHz sine wave
Conducted immunity IEC 60947-4-1, IEC 61000-4-6	140 dub (10V rms) 150 kHz–100 MHz	140 dub (10V rms) 150 kHz–100 MHz
Fast transient immunity IEC 60947-4-1 (Table 13) IEC 61000-4-4	±4 kV using direct method with accessory installed in expansion bay ±2 kV using direct method	±4 kV using direct method with accessory installed in expansion bay ±2 kV using direct method
Surge immunity IEC 60947-4-1 (Table 13) IEC 61000-4-5 a Class 4	Three-phase power inputs: ±4 kV line-to-line (DM) ±4 kV line-to-ground (CM)	Three-phase power inputs: ±4 kV line-to-line (DM) ±4 kV line-to-ground (CM)
	With accessory installed in expansion bay: ±2 kV line-to-line (DM) –>1.2/50 us; 2 kV line-to-earth, 1 kV line-to-line ±4 kV line-to-ground (CM)	With accessory installed in expansion bay: ±2 kV line-to-line (DM) –>1.2/50 us; 2 kV line-to-earth, 1 kV line-to-line ±4 kV line-to-ground (CM)
Power freq. magnetic field immunity IEC 60947-4-1, IEC 61000-4-8	30A/m, 50 Hz	30A/m, 50 Hz
Electromagnetic field IEC 60947-4-1 Table 13, IEC 61000-4-3	10 V/m	10 V/m
Distortion IEEE 519	5% THD max., 5th harmonic 3% max.	5% THD max., 5th harmonic 3% max.
Electrostatic discharge (ESD) IEC 61000-4-2, EN 61131-2	4 kV contact 8 kV air discharge	4 kV contact 8 kV air discharge
Electrical fast transient (EFT) IEC 61000-4-4, EN 61131-2	±2 kV using direct method	±2 kV using direct method
Surge immunity IEC 61000-4-5, EN 61131-2	±2 kV line-to-ground (CM)	±2 kV line-to-ground (CM)

Wiring Diagrams

Single-Phase Connections

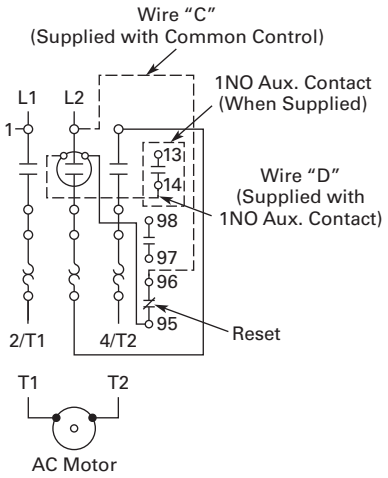

Three-Phase Connections

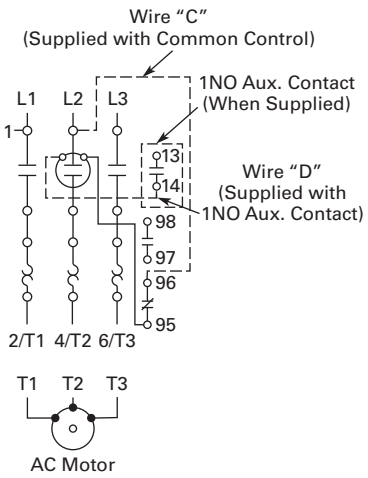

15–60A Contactors—C25

Contents

Description	*Page*
15–60A Contactors—C25	
Catalog Number Selection	**V5-T4-47**
Product Selection	**V5-T4-47**
Dimensions	**V5-T4-48**
25–60A Starters—A25, B25	**V5-T4-49**
15–45A Starters—A27, B27	**V5-T4-52**
Accessories	**V5-T4-55**
Options	**V5-T4-57**
Technical Data and Specifications	**V5-T4-58**

15–60A Contactors—C25

Product Description

Eaton offers the Definite Purpose Contactors and Starters in NEMA 1 enclosures. The C25 contactors are available as enclosed. The A25 and B25 Definite Purpose Starters combine the features and flexibility of the C25 Definite Purpose Contactors and Freedom Series Bimetallic Ambient Compensated Overload Relays mounted on a common mounting plate.

Catalog Number Selection

15–60A Contactors—C25

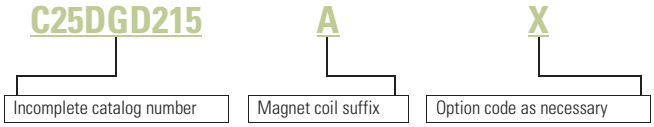

When Ordering Specify

- Catalog number plus magnet coil suffix, see **Page V5-T4-48**
- Modify catalog number for any options required, see Options, **Page V5-T4-57**

Product Selection

C25 Enclosed

Two-, Three- and Four-Pole NEMA Type 1 Enclosed Contactors

Ampere Rating				Maximum Motor (hp)		Maximum Motor (kW)			NEMA Type 1
Inductive Full Load	Resistive per Pole	Line Voltage	Locked Rotor	Single-Phase	Three-Phase	Single-Phase	Three-Phase	Number of Poles	Catalog Number ①
15	20	115	90	3/4	—	0.40	—	2	**C25DGD215_**
		230	90	2	3	1.5	2.2	3	**C25DGD315_**
		460	75	—	5	—	3.7		**C25DGD315_**
		575	60	—	5	—	3.7		**C25DGD315_**
25	35	115	150	2	—	1.5	—	2	**C25DGD225_**
		230	150	3	7-1/2	2.2	5.5	3	**C25DGD325_**
		460	125	—	10	—	7.5	4	**C25EGD425_**
		575	100	—	10	—	7.5		**C25EGD425_**
30	40	115	180	2	—	1.5	—	2	**C25DGD230_**
		230	180	5	10	3.7	7.5	3	**C25DGD330_**
		460	150	—	15	—	11	4	**C25EGD430_**
		575	120	—	15	—	11		**C25EGD430_**
40	50	115	240	3	—	2.2	—	2	**C25DGF240_**
		230	240	7-1/2	10	5.5	7.5	3	**C25DGF340_**
		460	200	—	20	—	15	4	**C25EGF440_**
		575	160	—	20	—	15		**C25EGF440_**
50	65	115	300	3	—	2.2	—	2	**C25DGJ250_**
		230	300	10	15	7.5	11	3	**C25DGJ350_**
		460	250	—	30	—	22		**C25DGJ350_**
		575	200	—	30	—	22		**C25DGJ350_**
60	75	115	360	5	—	3.7	—	2	**C25FGF260_**
		230	360	10	20	7.5	15	3	**C25FGF360_**
		460	300	—	40	—	30		**C25FGF360_**
		575	240	—	40	—	30		**C25FGF360_**

Note

① Incomplete catalog number. Replace underscore (_) in catalog number with magnet coil suffix from table on **Page V5-T4-48**.

Magnet Coil Suffix

Voltage 60 Hertz	50 Hertz	Coil Suffix
AC ①		
12	12	**R**
24	24	**T**
110–120 ②	110–120 ②	**A**
208–240	208–240	**E**
240 ③	220	**B**
277	—	**J**
—	380–415	**H**
440–480	440–480	**L**
550–600	550–600	**C**
12	12	**D**

Voltage 60 Hertz	Coil Suffix
DC ④	
12	**1R**
24	**1T**
48	**1W**
120	**1A**

Dimensions

Approximate Dimensions in Inches (mm)

C25 Contactors, NEMA 1 Enclosed

15–50 Ampere, Two- and Three-Pole (C799B18)

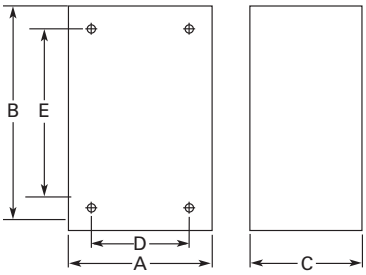

25–40 Ampere, Four-Pole— 60 Ampere, Two- and Three-Pole (C799B19)

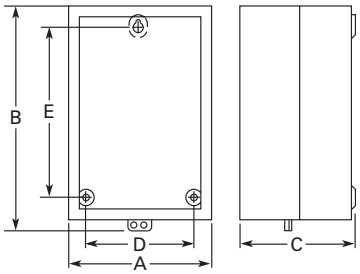

Dimensions and Shipping Weights

Ampere Size	Number of Poles	Wide A	High B	Deep C	Mounting D	E	Shipping Weight Lbs (kg)
NEMA 1 Enclosed							
15–50	2 and 3	4.10 (104.0)	6.75 (171.0)	3.50 (89.0)	2.75 (70.0)	4.88 (124.0)	3.4 (1.5)
25–40	4	5.62 (142.0)	9.51 (241.0)	4.81 (122.0)	4.50 (114.0)	8.00 (203.0)	5.8 (2.6)
60	2 and 3	5.62 (142.0)	9.51 (241.0)	4.81 (122.0)	4.50 (114.0)	8.00 (203.0)	6.3 (2.9)

Notes

① Class H AC coils available as option. Add **2** before AC coil suffix letter.
② 104–120A 50/60 Hz for 60A contactor.
③ Available through 50A.
④ Contactors with DC coils include an early break NC auxiliary contact, C320KGD1. See **Page V5-T4-62** for more detail.

25–60A Starters—A25, B25

Contents

Description	*Page*
15–60A Contactors—C25	**V5-T4-46**
25–60A Starters—A25, B25	
Catalog Number Selection	**V5-T4-50**
Product Selection	**V5-T4-50**
Dimensions	**V5-T4-51**
15–45A Starters—A27, B27	**V5-T4-52**
Accessories	**V5-T4-55**
Options	**V5-T4-57**
Technical Data and Specifications	**V5-T4-58**

25–60A Starters—A25, B25

Product Description

A25 and B25 Definite Purpose Starters from Eaton's Electrical Sector combine the features and flexibility of the C25 Definite Purpose Contactors and Freedom Series Bi-metallic Ambient Compensated Overload Relays mounted on a common mounting plate.

Standards and Certifications

- UL Recognized Components UL File #E-1491, Guide NLDX2
- CSA Certified Components File #LR353, Guide 380W-1.14 Class 3211 04

Catalog Number Selection

25–60A Starters—A25, B25

A25CGC30 — Incomplete catalog number
A — Magnet coil suffix
X — Option code as necessary

When Ordering Specify

- Catalog number plus magnet coil suffix, see **Page V5-T4-51**
- Modify catalog number for any options required, see Options, **Page V5-T4-57**
- Heater packs for specific FLA of motor, see **Page V5-T4-56**

Product Selection

A25, B25 Enclosed

Single- and Three-Phase NEMA Type 1 Enclosed Starters

Ampere Rating			Maximum Motor (hp)		Maximum Motor (kW)		Single-Phase ①②		Three-Phase ②	
							Common Control	Separate Control	Common Control	Separate Control
Inductive Full Load	Line Voltage	Locked Rotor	Single-Phase	Three-Phase	Single-Phase	Three-Phase	Catalog Number ③	Catalog Number ③	Catalog Number ③	Catalog Number ③
25	115	150	2	—	1.5	—	**B25CGC25_**	**B25SGC25_**	**A25CGC25_**	**A25SGC25_**
	230	150	3	7-1/2	2.2	5.5	**B25CGC25_**	**B25SGC25_**	**A25CGC25_**	**A25SGC25_**
	460	125	—	10	—	7.5	**B25CGC25_**	**B25SGC25_**	**A25CGC25_**	**A25SGC25_**
	575	100	—	10	—	7.5	**B25CGC25_**	**B25SGC25_**	**A25CGC25_**	**A25SGC25_**
30	115	180	2	—	1.5	—	**B25CGC30_**	**B25SGC30_**	**A25CGC30_**	**A25SGC30_**
	230	180	5	10	3.7	7.5	**B25CGC30_**	**B25SGC30_**	**A25CGC30_**	**A25SGC30_**
	460	150	—	15	—	11	**B25CGC30_**	**B25SGC30_**	**A25CGC30_**	**A25SGC30_**
	575	120	—	15	—	11	**B25CGC30_**	**B25SGC30_**	**A25CGC30_**	**A25SGC30_**
40	115	240	3	—	2.2	—	**B25CGE40_**	**B25SGE40_**	**A25CGE40_**	**A25SGE40_**
	230	240	7-1/2	10	5.5	7.5	**B25CGE40_**	**B25SGE40_**	**A25CGE40_**	**A25SGE40_**
	460	200	—	20	—	15	**B25CGE40_**	**B25SGE40_**	**A25CGE40_**	**A25SGE40_**
	575	160	—	20	—	15	**B25CGE40_**	**B25SGE40_**	**A25CGE40_**	**A25SGE40_**
50	115	300	—	—	—	—	—	—	**A25CGE50_**	**A25SGE50_**
	230	300	—	15	—	11	—	—	**A25CGE50_**	**A25SGE50_**
	460	250	—	30	—	22	—	—	**A25CGE50_**	**A25SGE50_**
	575	200	—	30	—	22	—	—	**A25CGE50_**	**A25SGE50_**
60	115	360	—	—	—	—	—	—	**A25CGE60_**	**A25SGE60_**
	230	360	—	20	—	15	—	—	**A25CGE60_**	**A25SGE60_**
	460	300	—	40	—	30	—	—	**A25CGE60_**	**A25SGE60_**
	575	240	—	40	—	30	—	—	**A25CGE60_**	**A25SGE60_**

Notes

① Starters do not include heater packs. Select heater pack from tables, see **Page V5-T4-56**.
② Set of three heater packs required for single-phase applications.
③ Incomplete catalog number. Replace underscore (_) in catalog number with magnet coil suffix from table on **Page V5-T4-51**.

Magnet Coil Suffix

Voltage 60 Hertz	50 Hertz	Coil Suffix
AC ①		
12	12	**R**
24	24	**T**
110–120 ②	110–120 ②	**A**
208–240	208–240	**B**
240 ③	220	**J**
277	—	**H**
—	380–415	**L**
440–480	440–480	**C**
550–600	550–600	**D**

Voltage 60 Hertz	Coil Suffix
DC ④	
12	**1R**
24	**1T**
48	**1W**
120	**1A**

Dimensions

Approximate Dimensions in Inches (mm)

A25 and B25 Starters

25, 30, 40, 50 and 60 Ampere

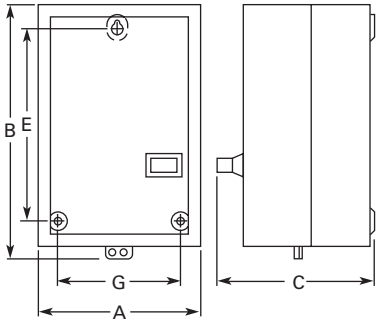

Dimensions and Shipping Weights

Ampere Size	Wide A	High B	Deep C	Mounting E	Mounting G	Shipping Weight Lbs (kg)
25 and 30	5.63 (143.0)	10.17 (258.0)	5.81 (148.0)	8.00 (203.0)	4.50 (114.0)	4.8 (2.2)
40, 50 and 60	7.64 (194.0)	13.27 (337.0)	6.67 (169.0)	10.75 (273.0)	6.00 (152.0)	10.6 (4.8)

Notes

① Class H AC coils available as option. Add **2** before AC coil suffix letter.
② 104–120A 50/60 Hz for 60A starter.
③ Available through 50A.
④ Starters with DC coils include an early breaking auxiliary contact, C320KGD1. See **Page V5-T4-62** for more detail.

15–45A Starters—A27, B27

Contents

Description	*Page*
15–60A Contactors—C25	**V5-T4-46**
25–60A Starters—A25, B25	**V5-T4-49**
15–45A Starters—A27, B27	
Product Selection	**V5-T4-53**
Dimensions	**V5-T4-54**
Accessories	**V5-T4-55**
Options	**V5-T4-57**
Technical Data and Specifications	**V5-T4-58**

15–45A Starters—A27, B27

Product Description

A27 and B27 Definite Purpose Starters from Eaton's Electrical Sector combine the features and flexibility of the C25 Definite Purpose Contactors and ***XT*** Series Bi-metallic Ambient Compensated Overload Relays.

Standards and Certifications

- UL Recognized Components UL File #E-1491, Guide NLDX2
- CSA Certified Components File #LR353, Guide 380W-1.14 Class 3211 04
- CE

Catalog Number Selection

15–45A Starters—A27, B27

A27CGE30	A	040
Incomplete catalog number	Magnet coil suffix	Overload relay suffix

When Ordering Specify

- Catalog number plus magnet coil suffix plus overload relay suffix, see **Page V5-T4-54**

Product Selection

A27, B27 Enclosed

Single- and Three-Phase NEMA Type 1 Enclosed Starters

Ampere Rating			Maximum Motor (hp)		Maximum Motor (kW)		Single-Phase		Three-Phase	
							Common Control	Separate Control	Common Control	Separate Control
Inductive Full Load	Line Voltage	Locked Rotor	Single-Phase	Three-Phase	Single-Phase	Three-Phase	Catalog Number ①	Catalog Number ①	Catalog Number ①	Catalog Number ①
15	115	90	3/4	—	0.4	—	**B27CGC15_**	**B27SGC15_**	**A27CGC15_**	**A27SGC15_**
	230	90	2	3	1.5	2.2	**B27CGC15_**	**B27SGC15_**	**A27CGC15_**	**A27SGC15_**
	460	75	—	5	—	3.7	**B27CGC15_**	**B27SGC15_**	**A27CGC15_**	**A27SGC15_**
	575	60	—	5	—	3.7	**B27CGC15_**	**B27SGC15_**	**A27CGC15_**	**A27SGC15_**
25	115	150	2	—	1.5	—	**B27CGC25_**	**B27SGC25_**	**A27CGC25_**	**A27SGC25_**
	230	150	3	7-1/2	2.2	5.5	**B27CGC25_**	**B27SGC25_**	**A27CGC25_**	**A27SGC25_**
	460	125	—	10	—	7.5	**B27CGC25_**	**B27SGC25_**	**A27CGC25_**	**A27SGC25_**
	575	100	—	10	—	7.5	**B27CGC25_**	**B27SGC25_**	**A27CGC25_**	**A27SGC25_**
30	115	180	2	—	1.5	—	**B27CGE30_**	**B27SGE30_**	**A27CGE30_**	**A27SGE30_**
	230	180	5	10	3.7	7.5	**B27CGE30_**	**B27SGE30_**	**A27CGE30_**	**A27SGE30_**
	460	150	—	15	—	11	**B27CGE30_**	**B27SGE30_**	**A27CGE30_**	**A27SGE30_**
	575	120	—	15	—	11	**B27CGE30_**	**B27SGE30_**	**A27CGE30_**	**A27SGE30_**
40	115	240	3	—	2.2	—	**B27CGE40_**	**B27SGE40_**	**A27CGE40_**	**A27SGE40_**
	230	240	7-1/2	10	5.5	7.5	**B27CGE40_**	**B27SGE40_**	**A27CGE40_**	**A27SGE40_**
	460	200	—	20	—	15	**B27CGE40_**	**B27SGE40_**	**A27CGE40_**	**A27SGE40_**
	575	160	—	20	—	15	**B27CGE40_**	**B27SGE40_**	**A27CGE40_**	**A27SGE40_**
45	115	270	3	—	2.2	—	**B27CGE45_**	**B27SGE45_**	**A27CGE45_**	**A27SGE45_**
	230	270	7-1/2	15	7.5	11	**B27CGE45_**	**B27SGE45_**	**A27CGE45_**	**A27SGE45_**
	460	225	—	30	—	22	**B27CGE45_**	**B27SGE45_**	**A27CGE45_**	**A27SGE45_**
	575	180	—	30	—	22	**B27CGE45_**	**B27SGE45_**	**A27CGE45_**	**A27SGE45_**

Note

① Incomplete catalog number. Replace underscore (_) in catalog number with magnet coil suffix plus overload relay suffix from tables on **Page V5-T4-54**.

Magnet Coil Suffix

Voltage 60 Hertz	50 Hertz	Coil Suffix
AC ①		
12	12	**R**
24	24	**T**
110–120	110–120	**A**
208–240	208–240	**B**
240 ②	220	**J**
277	—	**H**
—	380–415	**L**
440–480	440–480	**C**
550–600	550–600	**D**

Voltage 60 Hertz	Coil Suffix
DC ③	
12	**1R**
24	**1T**
48	**1W**
120	**1A**

Overload Relay Suffix

Motor Full Load Amperes	Suffix Code	For use with Contactor Ampere Range
Frame C		
0.1–0.16	**P16**	15–25A
0.16–0.24	**P24**	15–25A
0.24–0.4	**P40**	15–25A
0.4–0.6	**P60**	15–25A
0.6–1	**001**	15–25A
1–1.6	**1P6**	15–25A
1.6–2.4	**2P4**	15–25A
2.4–4	**004**	15–25A
4–6	**006**	15–25A
6–10	**010**	15–25A
10–16	**016**	15–25A
16–24	**024**	15–25A
24–32	**032**	15–25A
Frame D		
6–10	**010**	30–45A
10–16	**016**	30–45A
16–24	**024**	30–45A
24–40	**040**	30–45A
40–57	**057**	30–45A

Dimensions

Approximate Dimensions in Inches (mm)

A27 and B27 Starters

15, 25, 30, 40 and 50 Ampere

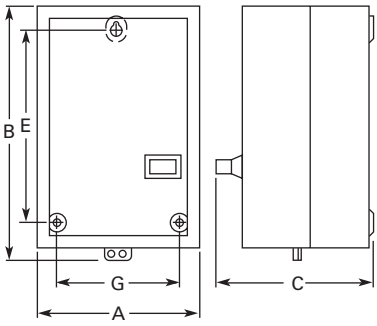

Dimensions and Shipping Weights

Ampere Size	Wide A	High B	Deep C	Mounting E	Mounting G	Shipping Weight Lbs (kg)
25 and 30	5.63 (143.0)	10.17 (258.0)	5.81 (148.0)	8.00 (203.0)	4.50 (114.0)	4.8 (2.2)
40, 50 and 60	7.64 (194.0)	13.27 (337.0)	6.67 (169.0)	10.75 (273.0)	6.00 (152.0)	10.6 (4.8)

Notes

① Class H AC coils available as option. Add **2** before AC coil suffix letter.

② Available through 45A.

③ Starters with DC coils include an early breaking auxiliary contact, C320KGD1. See **Page V5-T4-62** for more detail.

Accessories

Auxiliary Contact Kits (Side Mounted)

Side Mounted Auxiliary Contact

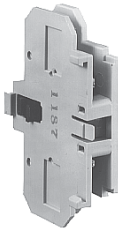

Heavy-Duty Pilot Rated for 10A at 600 Vac

Circuit	With Standard Pressure Plate Terminals Catalog Number	With Pressure Plate and Quick Connect Terminals Catalog Number
For 15 through 75A		
1NO	**C320KG1**	**C320KG11**
1NC	**C320KG2**	**C320KG12**
1NO-1NC	**C320KG3**	**C320KG13**
2NO	**C320KG4**	**C320KG14**
2NC	**C320KG5**	**C320KG15**
For 90A		
1NO	—	**C320DPG10**
1NC	—	**C320DPG01**
1NO-1NC	—	**C320DPG11**
2NO	—	**C320DPG20**
For 120 through 360A		
1NO	**C320KGS20**	—
1NC	**C320KGS21**	—
1NO-1NC	**C320KGS22**	—

Side Mounted Snap Switch

Snap Switch Design Side Mounted Auxiliary Contacts

Circuit	Snap Switch Design with Quick Connect Terminals Catalog Number
1NO-1NC	**C320SNP11**
2NO-2NC	**C320SNP22**

Magnet Coil Quick Connect Terminal

Description
Extra dual quick connect terminals (U-shaped) for magnet coil terminals ②

Note

① To order, add suffix number **9** to the complete catalog number. Example: C25DND215A**9**.

Heater Packs

Fast Trip—Class 10 Heater Packs

Manual or Automatic Reset

Heater packs are shipped three to a carton.
Catalog numbers listed below are for three heater packs.

Fast Trip Ratings

Motor Full Load Ampere Rating ① Dial Position A	B	C	D	Catalog Number ② (Includes Three Heater Packs)
0.26	0.313	0.367	0.42	**H2101B-3**
0.384	0.464	0.543	0.623	**H2102B-3**
0.57	0.688	0.806	0.924	**H2103B-3**
0.846	1.02	1.2	1.37	**H2104B-3**
1.28	1.55	1.83	2.1	**H2105B-3**
1.92	2.33	2.74	3.15	**H2106B-3**
2.3	2.79	3.28	3.77	**H2107B-3**
3.38	4.1	4.82	5.54	**H2108B-3**
4.96	6.03	7.09	8.16	**H2109B-3**
7.07	8.58	10.1	11.6	**H2110B-3**
9.6	11.2	12.8	14.4	**H2111B-3**
14.4	17.5	20.7	23.8	**H2112B-3**
18.7	21.8	25	28.1	**H2113B-3**
23.5	27.3	31	34.8	**H2114B-3**
28.3	32.6	37	41.3	**H2115B-3**
36.6	42.3	48.1	53.8	**H2116B-3**
53.8	60.8	67.9	74.9	**H2117B-3**

Trip Curves, see **Page V5-T4-58**.

Notes

① For motor full load amperes between listed values, adjust dial clockwise for higher or counter-clockwise for lower motor currents. The currents listed are for 1.5 service factor motors. A position adjustment is provided for 1.0 service factor motors.

② Set of three heater packs are required for both single- and three-phase applications.

Standard Trip—Class 20 Heater Packs

Manual or Automatic Reset

Heater packs are shipped three to a carton.
Catalog numbers listed below are for three heater packs.

Standard Trip Ratings

Motor Full Load Ampere Rating ① Dial Position A	B	C	D	Catalog Number ② (Includes Three Heater Packs)
0.254	0.306	0.359	0.411	**H2001B-3**
0.375	0.452	0.53	0.607	**H2002B-3**
0.56	0.676	0.791	0.907	**H2003B-3**
0.814	0.983	1.15	1.32	**H2004B-3**
1.2	1.45	1.71	1.96	**H2005B-3**
1.79	2.16	2.53	2.9	**H2006B-3**
2.15	2.6	3.04	3.49	**H2007B-3**
3.23	3.9	4.56	5.23	**H2008B-3**
4.55	5.5	6.45	7.4	**H2009B-3**
6.75	8.17	9.58	11	**H2010B-3**
9.14	10.8	12.4	14	**H2011B-3**
14	16.9	19.9	22.8	**H2012B-3**
18.7	22.7	26.7	30.7	**H2013B-3**
23.5	28.5	33.5	38.5	**H2014B-3**
29	34	39.1	44.1	**H2015B-3**
39.6	45.5	51.5	57.4	**H2016B-3**
53.9	60.9	67.9	74.9	**H2017B-3**

Trip Curves, see **Page V5-T4-58**.

Options

To order C25, C65, A25 and B25 contactors and starters with the factory installed options listed below, change the basic catalog number listed in the product selection table as noted.

Factory Installed Options

Description	Code Letter	Number of Poles
Terminals—15A through 50A		
Binding head screws		
Without quick connect terminals	**A**	2-, 3-, 4-pole
With quick connect terminals (side-by-side)	**B**	2-, 3-, 4-pole
With quick connect terminals (vertical in-line)	**G**	2-, 3-pole
Screw/pressure plate ①		
Without quick connect terminals	**C**	2-, 3-, 4-pole
With quick connect terminals (side-by-side)	**D**	2-, 3-, 4-pole
With quick connect terminals (vertical in-line)	**H**	2-, 3-pole
Box lugs (#2 posidrive/slotted screw)		
Without quick connect terminals	**E**	2-, 3-, 4-pole ②
With quick connect terminals (side-by-side)	**F**	2-, 3-, 4-pole ②
With quick connect terminals (vertical in-line)	**J**	2-, 3-pole
Box lugs (hex socket allen head screw)		
Without quick connect terminals	**K**	2-, 3-pole
With quick connect terminals (side-by-side)	**L**	2-, 3-pole
With quick connect terminals (vertical in-line)	**M**	2-, 3-pole
Terminals—60A through 75A ③		
Box lugs (slotted screw)		
Without quick connect terminals	**E**	2-, 3-pole
With quick connect terminals	**F**	2-, 3-pole

Notes

① Screw/pressure plate terminals are not available on 50A contactors.
② Four-pole contactors have box lugs with slotted screws.
③ Replace letter in the **6th** position of catalog number with code letter listed. Example: Change C25FN**F**250 to C25FN**E**250.

Technical Data and Specifications

20–40A, Compact Single- and Two-Pole—C25

Description	Specification
Insulation voltage	690V
Current rated and hp/kw rated contacts	Double break
Magnet coil	Class F, 155°C
Contact arc covers	Standard on all contactors
Standard power terminals	5/16 in hex washer head screws Quad (4) quick connect terminals on all line and load terminals Box lugs available as option
Line and load terminal designations	Marked on contactors
Operating temperature range	–13° to 158°F (–25° to 70°C)
Terminal wire range	
Hex washer head screws	6–10 AWG, 30 lb-in torque rating
Box lugs	6–10 AWG, 35 lb-in torque rating 8 AWG, 40 lb-in torque rating 6–4 AWG, 45 lb-in torque rating
Mounting position	Vertical, horizontal or tabletop

Coil Characteristics

AC Coil Voltage 50/60 Hz	Maximum Inrush VA	Maximum Sealed VA	Maximum Sealed Watts
Single-Pole			
24	33	6	2
120	33	6	2
208/240	33	6	2
277	33	6	2

AC Coil Voltage 50/60 Hz	Maximum Inrush VA	Maximum Sealed VA	Maximum Sealed Watts
Two-Pole			
24	41	6.5	3
120	41	6.5	3
208/240	41	6.5	3
277	41	6.5	3

Trip Curves

Bimetallic Ambient Compensated Overload Relay—25°C Open Rating

Class 10 Overload Relay (25°C Open Rating)

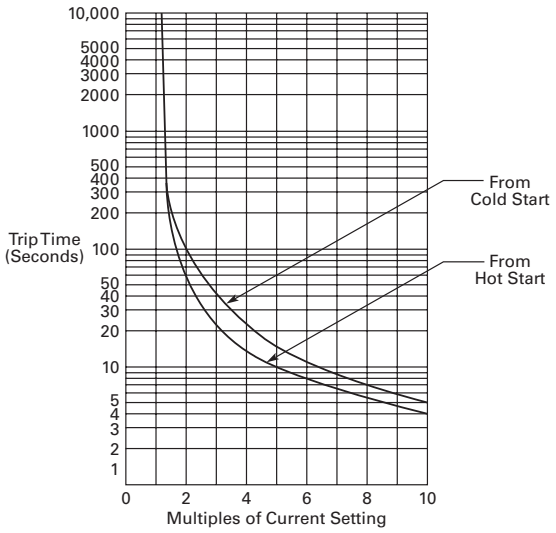

Class 20 Overload Relay (25°C Open Rating)

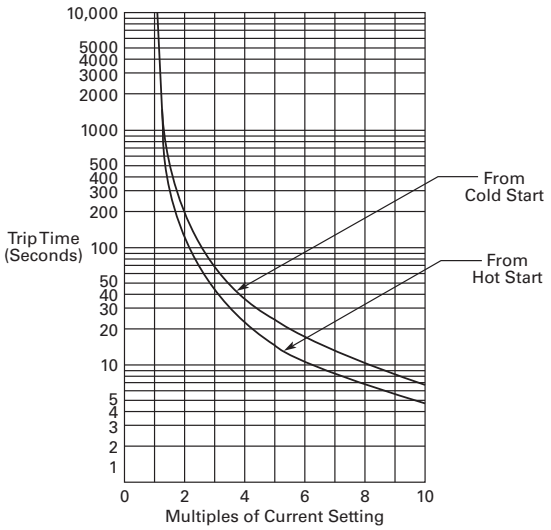

Renewal Parts

Renewal Contact Kits for C25 Definite Purpose Contactors

- Replace complete contactor for:
  - C25A_
  - C25B_
  - C25C_
  - C25D_

Renewal Contact Kits for C25 Definite Purpose Contactors

Catalog Number	Single-Pole Kit Part Number	Two-Pole Kit Part Number	Three-Pole Kit Part Number
C25FNF250	—	6-65-5	—
C25FNF350	—	—	6-65-6
C25FNF260	—	6-65-7	—
C25FNF360	—	—	6-65-8
C25FNF275	—	6-65-20	—
C25FNF375	—	—	6-65-19
C25GNF290	—	—	—
C25GNF390	—	—	—
C25HNE3120	—	—	6-43-6
C25KNE3200	—	—	6-288
C25KNE3300	—	—	6-286
C25LNE3360	—	—	6-45-2

Product Selection

AC Coils

AC Coil Voltage	Frequency	Inrush (Maximum) VA	Inrush (Maximum) Watts	Sealed (Maximum) VA	Sealed (Maximum) Watts	Coil Suffix	Class	Part Number
15, 25, 30 and 40A—Two- and Three-Pole (Series D1 and E1)								
12	60	74.85	46.1	5.53	1.68	**R**	Class F, 155°C	**9-3185-5**
24		81.35	49.7	5.83	1.74	**T**		**9-3185-6**
110/120		74.69	51.6	5.79	1.81	**A**		**9-3185-1**
208/240		82.64	59.1	6.96	2.38	**B**		**9-3185-2**
220/240	60	74.03	51.8	5.85	1.99	**J**	Class F, 155°C	**9-3185-10**
440/480		73.39	52.1	6.09	2.58	**C**		**9-3185-3**
550/600		79.47	51.7	6.56	3.05	**D**		**9-3185-4**
277		72.88	52.4	6.09	2.58	**H**		**9-3185-7**
380/415	50	64.5	50.6	6.08	2.43	**L**	Class F, 155°C	**9-3185-8**
15, 25, 30 and 40A—Two- and Three-Pole (Series C1)								
12	60	65	30	11	2.5	**R**	Class F, 155°C	**9-3125-5**
24		65	30	11	2.5	**T**		**9-3125-6**
104/120		65	30	11	2.5	**A**		**9-3125-1**
208/240	50	75	35	17	3.5	**B**	Class F, 155°C	**9-3125-2**
440/480		75	35	17	3.5	**C**		**9-3125-3**
550/600		75	35	17	3.5	**D**		**9-3125-4**
277	60	65	30	11	2.5	**H**	Class F, 155°C	**9-3125-8**
380/415	50	75	35	17	3.5	**L**	Class F, 155°C	**9-3125-8**

AC Coils, continued

AC Coil Voltage	Frequency	Inrush (Maximum) VA	Inrush (Maximum) Watts	Sealed (Maximum) VA	Sealed (Maximum) Watts	Coil Suffix	Class	Part Number
15, 25, 30 and 40A—Two- and Three-Pole (Series D1 and E1)								
12	60	74.85	46.1	5.53	1.68	**R**	Class H, 180°C	**9-3252-5**
24		81.35	49.7	5.83	1.74	**T**		**9-3252-6**
110/120		74.69	51.6	5.79	1.81	**A**		**9-3252-1**
208/240		82.64	59.1	6.96	2.38	**B**		**9-3252-2**
220/240	60	74.03	51.8	5.85	1.99	**J**	Class H, 180°C	**9-3252-10**
440/480		73.39	52.1	6.09	2.58	**C**		**9-3252-3**
550/600		79.47	51.7	6.56	3.05	**D**		**9-3252-4**
277		72.88	52.4	6.09	2.58	**H**		**9-3252-7**
380/415	50	64.5	50.6	6.08	2.43	**L**	Class H, 180°C	**9-3252-8**
50A—Two- and Three-Pole (Series D1 and E1)								
12	60	115.8	73.6	7.71	2.8	**R**	Class F, 155°C	**9-3186-5**
24		118.1	70.7	7.58	2.79	**T**		**9-3186-6**
110/120		110.7	73.3	7.67	2.89	**A**		**9-3186-1**
208/240		124.9	90.3	10.04	3.74	**B**		**9-3186-2**
220/240	60	112.9	76.2	7.6	3.02	**J**	Class F, 155°C	**9-3186-10**
440/480		114.7	75.6	8.01	3.68	**C**		**9-3186-3**
550/600		109	78.6	8.21	4.11	**D**		**9-3186-4**
277		115.4	73.1	7.73	3.12	**H**		**9-3186-7**
380/415	50	110.3	77	8.66	3.31	**L**	Class F, 155°C	**9-3186-8**
50A—Two- and Three-Pole (Series D1 and E1)								
12	60	115.8	73.6	7.71	2.8	**R**	Class H, 180°C	**9-3253-5**
24		118.1	70.7	7.58	2.79	**T**		**9-3253-6**
110/120		110.7	73.3	7.67	2.89	**A**		**9-3253-1**
208/240		124.9	90.3	10.04	3.74	**B**		**9-3253-2**
220/240	60	112.9	76.2	7.6	3.02	**J**	Class H, 180°C	**9-3253-10**
440/480		114.7	75.6	8.01	3.68	**C**		**9-3253-3**
550/600		109	78.6	8.21	4.11	**D**		**9-3253-4**
277		115.4	73.1	7.73	3.12	**H**		**9-3253-7**
380/415	50	110.3	77	8.66	3.31	**L**	Class H, 180°C	**9-3253-8**
60 and 75A—Two- and Three-Pole; 25, 30 and 40A—Four-Pole								
12	60	204	84	36.5	8	**R**	Class B, 130°C	**9-3256-5**
24						**T**		**9-3256-6**
104/120						**A**		**9-3256-1**
208/240	50	240	100.8	50.4	10.8	**B**	Class B, 130°C	**9-3256-2**
440/480						**C**		**9-3256-3**
550/600						**D**		**9-3256-4**
277	60	204	84	36.5	8	**H**	Class B, 130°C	**9-3256-7**
380/415	50	199	88.8	37.8	8.8	**L**	Class B, 130°C	**9-3256-8**

AC Coils, continued

AC Coil Voltage	Frequency	Inrush (Maximum) VA	Inrush (Maximum) Watts	Sealed (Maximum) VA	Sealed (Maximum) Watts	Coil Suffix	Class	Part Number
90A—Two- and Three-Pole (Series F1)								
24	50/60	325/300	—	48/35	12	**T**	Class B, 130°C	**9-3080-1**
110/120						**A**		**9-3080-2**
208–220						**B**		**9-3080-3**
380–415	50/60	325/300	—	48/35	12	**C**	Class B, 130°C	**9-3080-5**
277	60	325/300	—	48/35	12	**H**	Class B, 130°C	**9-3080-4**
120A—Three-Pole								
24	50/60	390	112	49.8	13	**T**	Class B, 130°C	**9-2756-16**
110/120						**A**		**9-2756-1**
220/240						**B**		**9-2756-2**
440/480						**C**		**9-2756-3**
550/600						**D**		**9-2756-4**
208	60	390	112	49.8	13	**E**	Class B, 130°C	**9-2756-5**
277						**H**		**9-2756-9**
200, 300 and 360A—Three-Pole								
110/120	50/60	1040	216	116	17	**A**	Class F, 155°C	**9-1891-1**
220/240						**B**		**9-1891-2**
440/480						**C**		**9-1891-3**
550/600						**D**		**9-1891-4**
208	60	1040	216	116	17	**E**	Class F, 155°C	**9-1891-13**
277						**H**		**9-1891-26**

DC Operation

These DC coils have separate pick-up and seal windings. The pick-up winding must be connected to an early break normally closed auxiliary contact block and provide the magnetic force required to close the magnet. As the magnet approaches the closed position, the early break normally closed contact is opened and the holding coil is inserted in series with the pick-up winding.

The early break contact block (C320KGD1) has to be attached to the side of the contactor, taking up one of the positions available for add-on auxiliary contact blocks.

DC Coil Elementary Diagram—Contactors and Starters

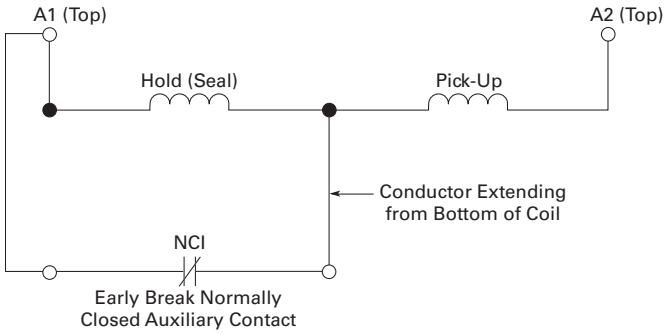

DC Coils ①

DC Coil Voltage	Inrush (Maximum) Amperes	Inrush (Maximum) Watts	Sealed (Maximum) Amperes	Sealed (Maximum) Watts	Coil Suffix	Class	Part Number
15, 25, 30 and 40A—Two- and Three-Pole (Series D1 and E1)							
12	5.8	69	0.272	3.27	**1R**	Class F, 155°C	**9-3254-2**
24	2.9	69	0.13	3.12	**1T**		**9-3254-3**
48	1.5	72	0.07	3.37	**1W**		**9-3254-4**
120	0.61	73	0.03	3.68	**1A**		**9-3254-5**
50A—Two- and Three-Pole (Series D1 and E1)							
12	5.8	69	0.272	3.27	**1R**	Class F, 155°C	**9-3255-2**
24	2.9	69	0.13	3.12	**1T**		**9-3255-3**
48	1.5	72	0.07	3.37	**1W**		**9-3255-4**
120	0.61	73	0.03	3.68	**1A**		**9-3255-5**
15, 25, 30 and 40A—Two- and Three-Pole (Series C1)							
12	4.7	51	232 mA	1.8	**1R**	Class F, 155°C	**9-3126-1**
24	2.7	64	110 mA	2.4	**1T**		**9-3126-2**
48	1.4	65	55 mA	2.5	**1W**		**9-3126-3**
60 and 75A—Two- and Three-Pole; 25, 30 and 40A—Four-Pole (Series C1)							
12	15.4	126	0.434	5.26	**1R**	Class F, 155°C	**9-3257-1**
24	6.2	88.4	0.211	5.12	**1T**		**9-3257-2**
48	2.9	76.2	0.102	4.92	**1W**		**9-3257-3**
120	1.1	67.3	0.044	5.32	**1A**		**9-3257-4**

Note

① DC coils require an early break NC auxiliary contact C320KGD1 (1NCI) or C320KGD2 (1NO-1NCI). Order separately, not included with replacement coil.

Heavy-Duty Special Purpose Contactors

Contents

Description	*Page*
Heavy-Duty Special Purpose Contactors	
Product Selection	**V5-T4-64**
Accessories	**V5-T4-64**
Renewal Parts	**V5-T4-65**
Technical Data and Specifications	**V5-T4-65**
Dimensions	**V5-T4-66**

Product Description

The DPCK Contactors are designed to provide peak performance and reliability on special switching applications. These heavy-duty special purpose contactors are rated for applications up to 1500 Vac.

Application Description

- Typical applications include mining equipment, welding equipment, heating and air conditioning applications and other loads that require a compact heavy-duty contactor rated up to 1500 Vac
- The DPCK Contactors are supplied with bolts and washers on each terminal for use with customer supplied lugs

Features

- A double wound epoxy coil allows for lower temperature rise and longer life
- The U-shaped magnet provides fast, reliable action, long life and lower power requirements
- Stainless steel kick-out springs
- Rugged single-piece mounting plate
- Allows up to four double circuit auxiliary contacts per contactor

Benefits

- All contacts are silver alloy, providing long life and resistance to welding
- Straight-through wiring and up front terminals allow for fast, easy installation
- Loosening two captive screws allows for easy visual inspection of contacts

Product Selection

When Ordering Specify

- Catalog number with any required accessories from below

35A 600/1000V Contactor

DPCK Air Break Contactors—Two- and Three-Pole ①

Open Ampere Rating 600V	1000V	1500V	Coil Voltage 60 Hz ②	Open Type—Two-Pole Catalog Number	Three-Pole Catalog Number
35	35	20	240	**DPCK2035WW**	**DPCK3035WW**
			480	**DPCK2035XW**	**DPCK3035XW**
			600	**DPCK2035EW**	**DPCK3035EW**
100	100	75	240	**DPCK2100WW**	**DPCK3100WW**
			480	**DPCK2100XW**	**DPCK3100XW**
			600	**DPCK2100EW**	**DPCK3100EW**

250A 600V Contactor

DPCK Air Break Contactors—Four- and Five-Pole ①

Open Ampere Rating 600V	1000V	1500V	Coil Voltage 60 Hz ②	Open Type—Four-Pole Catalog Number	Five-Pole Catalog Number
35	35	20	240	**DPCK4035WW**	**DPCK5035WW**
			480	**DPCK4035XW**	**DPCK5035XW**
			600	**DPCK4035EW**	**DPCK5035EW**

Accessories

Accessory Kits

Description	Catalog Number
Auxiliary contacts, 1NO-1NC	**J11**
Horizontal Mechanical Interlock	
35A	**180C113G09**
100A	**1264C37G01**
Surge suppressor	**SS56**

Notes

① Holding circuit auxiliary contact not included. If required, order from Accessories above.

② For other coil voltages, refer to replacement coils on **Page V5-T4-65** and insert proper letter in place of **9th** character of listed catalog number. Example: DPCK3035**W**W with 380/50 coil DPCK3035**H**W.

Renewal Parts

DPCK Contactor Renewal Parts

Description	Hz	Coil Suffix Code	35A Two-, Three-Pole Part Number	Four-, Five-Pole Part Number	100A Two-, Three-Pole Part Number
Contact Kit					
Two-pole	—	—	**180C180G01**	①	**180C180G05**
Three-pole	—	—	**180C180G02**	②	**180C180G06**
ARC box	—	—	**673B439G01**	**673B439G02**	**673B440G01**
Upper base	—	—	**673B439G03**	**673B439G04**	**673B440G02**
Lower base	—	—	**673B439G05**	**673B439G06**	**673B440G03**
Crossbar	—	—	**673B439G07**	**673B439G08**	**673B440G04**
Magnet Coil					
120/110	60/50	**A**	**1266C28G01**	**1266C29G01**	**1254C70G01**
110	60	**V**	**1266C28G08**	**1266C29G06**	**1254C70G08**
208/220	60	**B**	**1266C28G02**	**1266C29G02**	**1254C70G02**
220/240	60	—	**N/A**	**N/A**	**N/A**
240/220	60/50	**W**	**1266C28G09**	**1266C29G07**	**1254C70G03**
480/440	60/50	**X**	**1266C28G10**	**1266C29G08**	**1254C70G05**
440/480	60	—	**N/A**	**N/A**	**N/A**
600/550	60/50	**E**	**1266C28G05**	**1266C29G04**	**1254C70G07**
550	60	—	**N/A**	**N/A**	**N/A**
380	50	**H**	**1266C28G06**	**1266C29G09**	**N/A**
380/110	60	—	**N/A**	**N/A**	**1254C70G12**

Technical Data and Specifications

Magnet Coil VA—60 Hz

Catalog Number	Open VA	Closed VA	Closed Watts
DPCK3035	625	50	18
DPCK3100	1200	130	40

Notes

① For a four-pole device, use (2) of the 180C180G01 contact kits.

② For a five-pole device, use (1) of the 180C180G01 and (1) of the 180C180G02 contact kits.

Contact Ratings

Volts	Full Load Current (Amperes)	Locked Rotor Current (Amperes)	Resistive Load (Amperes)	Lighting Load (Amperes)
Catalog Number DPCK3035				
120	35	240	35	35
240	35	240	35	35
480	35	200	35	35
600	35	200	35	35
1000	35	200	—	—
1500	20	160	—	—
Catalog Number DPCK3100				
120	100	600	100	100
240	100	600	100	100
480	100	600	100	100
600	100	600	100	100
1000	100	450	—	—
1500	75	300	—	—

Dimensions

Approximate Dimensions in Inches (mm)

DPCK Air Break Contactors—35 and 100 Ampere

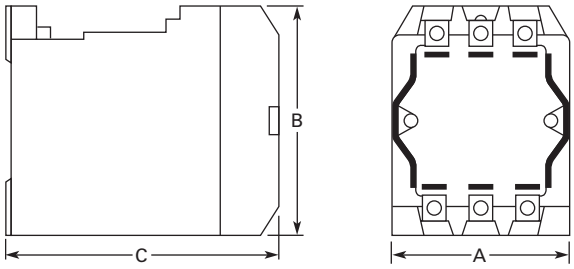

Poles	Wide A	High B	Deep C	Shipping Weight Lbs (kg)
35A Contactors				
2 and 3	4.06 (103.1)	5.44 (138.2)	5.63 (143.0)	16.0 (7.3)
4 and 5	6.06 (153.9)	5.44 (138.2)	5.63 (143.0)	19.0 (8.6)
100A Contactors				
2 and 3	5.38 (136.7)	7.81 (198.4)	6.75 (171.5)	28.0 (12.7)

DC Contactors—Type C80

Cat. No. C80FJ421N00
Size 4 — NC Contactor

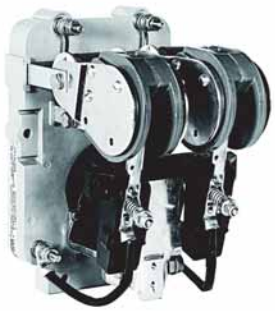

Cat. No. C80DG221N00
Size 2 — 2 Pole Contactor

Contents

Description	Page
DC Contactors—Type C80	
Catalog Number Selection	V5-T4-68
Product Selection	V5-T4-69
Options	V5-T4-70
Accessories	V5-T4-70
Renewal Parts	V5-T4-72
Technical Data and Specifications	V5-T4-72
Dimensions	V5-T4-73
600V Contactors	V5-T4-74
DPM 750V Contactor	V5-T4-78
AVD–Contactor	V5-T4-81
D–Contactor	V5-T4-84
Reversing/Assignment Contactor	V5-T4-87

DC Contactors—Type C80

Product Description

These dc mill type contactors are designed for heavy industry service and are suitable for use on moving machinery. The contactors listed in this section are for surface mounting on steel panels and front-of-panel wiring. The power stud assembly is mounted on the side of the contactor, rather than as part of a separate mounting kit.

These contactors utilize dc coils. If control power is 120 Vac, the rectifier module listed on **Page V5-T4-71** should be used in conjunction with a 100 V coil contactor.

Auxiliary contacts and mechanical interlocks for use with these contactors are listed on the following pages.

The contactors feature forged steel armature levers and magnet frames for superior physical strength. Self-lubricating bearings eliminate the need for lubricating the contactor. Hot-molded arc chute assemblies contain no asbestos and have better arc extinction characteristics for longer contact life. The short stroke armature results in a mechanical life of more than 20 million operations.

The arc chutes and magnetic blowout structures are designed to quickly absorb and dissipate the heat caused by arcing. In addition to increasing contact life, the molded arc chute offers advantages of improved mechanical life and cooling characteristics plus superior arc-tracking resistance. The arc chutes are hinged to provide front accessibility, easy inspection or replacement of contacts without removing any other contactor parts.

Construction of the pivot pin assembly provides positive pin locking so that the bearing pin remains stationary with respect to the operating movement of the forged armature.

A leaf spring attached to the unit base and the arc chute holds the chute in the "down" or functioning position. The addition of this assembly resists the violent vibrations encountered on open hearth charging machines and on a wide variety of crane applications.

Pre-drilled mounting holes are provided on the unit base to accommodate interlock mounting brackets. An interlock is merely attached to a bracket and the assembly is then bolted in the desired operating position on the contactor.

DC Drive Service Contactors

Eaton's industrial type contactors modified for dc drive service are provided with silver faced contact tips, to provide optimum contact structure and minimum maintenance under continuous duty service. These contactors are designed for steel panel surface mounting.

Power studs are a part of the contact or assembly.

Standards and Certifications

- CMAA 5.6.6-2
- NEMA ICS3-441, 442, 443
- NEMA ICS2-331.23
- NEMA ICS2-110.05.02
- NEMA ICS2-125.21.02

Catalog Number Selection

DC Contactor Catalog Numbering System

C80 E H 4 2 1 B 0 2

Base Catalog Number
C80

NEMA Size	
D = Size 2	**J** = Size 6
E = Size 3	**K** = 6A ①
F = Size 4	**W** = Size 8
G = Size 5	

Blowout Coil Rating	
X = None	**J** = 150
C = 5	**K** = 300
D = 10	**L** = 600
F = 25	**M** = 810
G = 50	**N** = 1350
H = 100	

Power Pole Configuration
1 = 1NO
2 = 2NO
4 = 1NC

Coil Voltage
1 = 115 Vdc
2 = 230 Vdc
4 = 100 Vdc

Type of Mounting
0 = None
1 = Surface, front of panel
3 = Elevated, front of panel

Auxiliary Contact Location
A = Size 2 side mounted
B = Size 2 thru 8 bottom mounted with LH and/or RH interlock
N = None

LH Auxiliary Contacts	
1 = 1NO	**4** = 1NC
2 = 2NO	**0** = None
3 = 1NO-1NC	

RH Auxiliary Contacts	
1 = 1NO	**4** = 1NC
2 = 2NO	**0** = None
3 = 1NO-1NC	

Product Selection

When Ordering

Select complete Catalog Number from the tables below and on **Page V5-T4-70**. If contactor is to include factory assembled auxiliary contacts, change **N00** suffix to correct suffix letter and digits from Accessories—Auxiliary Contacts tables on **Page V5-T4-71**.

Example: Catalog Number for elevated Size 3 NO contactor, 230 Vdc coil with 2NO auxiliary contact bottom mounted on RH side of contactor is C80EH123**B02**.

Surface Mounted

Surface Mounted DC Contactors without Auxiliary Contacts

NEMA Size	Number of Poles	Blowout Coil Ampere	Catalog Number 100 Vdc Coil	115 Vdc Coil	230 Vdc Coil
2	1NO	None	**C80DX141N00**	**C80DX111N00**	**C80DX121N00**
		5	**C80DC141N00**	**C80DC111N00**	**C80DC121N00**
		10	**C80DD141N00**	**C80DD111N00**	**C80DD121N00**
		25	**C80DF141N00**	**C80DF111N00**	**C80DF121N00**
		50	**C80DG141N00**	**C80DG111N00**	**C80DG121N00**
	2NO	None	**C80DX241N00**	**C80DX211N00**	**C80DX221N00**
		5	**C80DC241N00**	**C80DC211N00**	**C80DC221N00**
		10	**C80DD241N00**	**C80DD211N00**	**C80DD221N00**
		25	**C80DF241N00**	**C80DF211N00**	**C80DF221N00**
		50	**C80DG241N00**	**C80DG211N00**	**C80DG221N00**
3	1NO	100	**C80EH141N00**	**C80EH111N00**	**C80EH121N00**
	1NC	100	**C80EH441N00**	**C80EH411N00**	**C80EH421N00**
4	1NO	150	**C80FJ141N00**	**C80FJ111N00**	**C80FJ121N00**
	1NC	150	**C80FJ441N00**	**C80FJ411N00**	**C80FJ421N00**
5	1NO	300	**C80GK141N00**	**G80GK111N00**	**C80GK121N00**
	1NC	300	**C80GK441N00**	**C80GK411N00**	**C80GK421N00**
6	1NO	600	**C80JL141N00**	**C80JL111N00**	**C80JL121N00**
	1NC	600	**C80JL441N00**	**C80JL411N00**	**C80JL421N00**
6A ①	1NO	810	**C80KM141N00**	**C80KM111N00**	**C80KM121N00**
8	1NO	1350	**C80WN141N00**	**C80WN111N00**	**C80WN121N00**

Elevated Mounted

Elevated Mounted DC Contactors without Auxiliary Contacts

NEMA Size	Number of Poles	Blowout Coil Ampere	Catalog Number 100 Vdc Coil	115 Vdc Coil	230 Vdc Coil
3	1NO	100	**C80EH143N00**	**C80EH113N00**	**C80EH123N00**
	1NC	100	**C80EH443N00**	**C80EH413N00**	**C80EH423N00**
4	1NO	150	**C80FJ143N00**	**C80FJ113N00**	**C80FJ123N00**
	1NC	150	**C80FJ443N00**	**C80FJ413N00**	**C80FJ423N00**
5	1NO	300	**C80GK143N00**	**G80GK113N00**	**C80GK123N00**
	1NC	300	**C80GK443N00**	**C80GK413N00**	**C80GK423N00**
6	1NO	600	**C80JL143N00**	**C80JL113N00**	**C80JL123N00**
	1NC	600	**C80JL443N00**	**C80JL413N00**	**C80JL423N00**
6A ①	1NO	810	**C80KM143N00**	**C80KM113N00**	**C80KM123N00**
8	1NO	1350	**C80WN143N00**	**C80WN113N00**	**C80WN123N00**

Note

① Not a NEMA size.

Surface Mounted DP Drive Service Contactors without Auxiliary Contacts

Number of Poles	Ampere Rating	Catalog Number 100 Vdc Coil
1NO	260	**C80RK141N00**
1NC	260	**C80RK441N00**
1NO	480	**C80SL141N00**
1NC	480	**C80SL441N00**
1NO	960	**C80TM141N00**

Options

Other Options Available

- Silver faced contact tips:
  - Can be supplied in place of standard contact tips

Note: Use silver tips for non-arcing or long (8 hour) extended continuous current applications.

- Special voltage coils:
  - Coils with dc voltage ratings other than those listed are available
- 1800 A contactors:
  - Size 8 A (not a NEMA size) contactors are also available
- Consult factory for pricing

Accessories

Auxiliary Contacts

Mounting Kits for Auxiliary Contacts

Separate for Field Installation						Factory Installed
For Size and Type of Contactor		Location of Auxiliary Contacts on Contactor and Number of Units Kit Will Mount				
NEMA Size	Contactor Power Pole Configuration	Location	Number of Units	Maximum Number of Units Acceptable per Contactor	Mounting Kit Catalog Number	Suffix Code Letter for Factory Installation
2	1NO	Bottom —right and left	2	2	**10923H11**	**B**
	1NO or 1NO Ltl	Side—right or left	1	1	**10923H12**	**A**
	2NO	Bottom—right and left	1	2	**10923H14**	**B**
		Side—left	1	2	**10923H15**	**A**
		Side—right	1	2	**10923H16**	**A**
	2NO-1NC	Side—left	1	2	**10923H15**	**A**
		Side—right	1	2	**10923H16**	**A**
3, 4 and 5	1NO	Bottom—right and left	2	2	**10923H19**	**B**
		Bottom—left only	1	1	**10923H38**	**B**
	1NO Ltl or 1NC	Bottom—right	1	1	**10923H20**	**B**
6, 6A, 8 and 8A	1NO	Bottom—right and left	2	2	**10923H19**	**B**
		Bottom—left only	1	1	**10923H38**	**B**
	1NO Ltl	Bottom—right	1	1	**10923H20**	**B**
	1NC	Bottom—right	1	1	①	—

Note

① 10923H19 supplied with contactor as standard. No charge.

Auxiliary Contacts—without Mounting Kit All Sizes Bottom Mounted

Separate for Field Installation		Factory Installed	
Contact Configuration	Catalog Number	Suffix Code LH Position	Suffix Code RH Position
None	—	0	0
1NO	10923H1	1	1
2NO	10923H2	2	2
1NO-1NC	10923H3	3	3
1NC	10923H4	4	4
2NC	10923H5	5	5

Auxiliary Contacts—without Mounting Kit Size 2 Side Mount Only

Separate for Field Installation		Factory Installed	
Contact Configuration	Catalog Number	Suffix Code LH Position	Suffix Code RH Position
None	—	0	0
1NO	10923H6	1	1
2NO	10923H7	2	2
1NO-1NC	10923H8	3	3
1NC	10923H9	4	4

Rectifiers

Rectifier Module

Description	Contactor Size	Catalog Number
120 Vac input	All	C81EB
100 Vdc output 3.5 A		

Mounting Kits and Mechanical Interlocks

Contactor Mounting Kits ① and Mechanical Interlocks

NEMA Size	Number of Poles	Type of Mounting	For Metal Panels Catalog Number
Mounting Kits			
3, 4	1	Surface, front-of-panel wiring	C81AEA11
		Elevated, front-of-panel wiring	C81AEA13
5	1	Surface, front-of-panel wiring	C81AGA11
		Elevated, front-of-panel wiring	C81AGA13
6, 6A	1	Surface, front-of-panel wiring	C81AJA11
		Elevated, front-of-panel wiring	C81AJA13
8, 8A	1	Surface, front-of-panel wiring	C81ALA11
		Elevated, front-of-panel wiring	C81ALA13
Mechanical Interlocks			
2	1	Surface	C81DDA11
	2		C81DDA12
	3		C81DDA13
3, 4	1	Surface	C81DEA11
		Elevated	C81DEA21
5	1	Surface	C81DGA11
		Elevated	C81DGA21
6, 6A	1	Surface	C81DJA11
		Elevated	C81DJA21
8, 8A	1	Surface	C81DLA11
		Elevated	C81DLA21

Note

① Mounting kits include power studs and stud mounting, as well as contactor mounting hardware, but do not include lugs.

Renewal Parts

Renewal Parts ①

Description		Size 2 Single-, Two-, Three-Pole and Ltl 25 and 50 Ampere Part Number	Size 3 Single-Pole NO, NC and Ltl 100 Ampere Part Number	Size 4 Single-Pole NO, NC and Ltl 150 Ampere Part Number	Size 5 Single-Pole NO, NC and Ltl 300 Ampere Part Number	Size 6 Single-Pole NO, NC and Ltl 600 Ampere Part Number	Size 6A Single-Pole NO, NC and Ltl 810 Ampere Part Number	Size 8 Single-Pole NO 1350 Ampere Part Number
Set of Contacts								
Single-pole copper		6-599	6-189	6-189	6-189-3	6-189-4	6-189-4	6-215
Single-pole silver		—	6-189-5	6-189-5	6-189-7	6-189-8	6-189-8	6-215-2
Two-pole copper		6-169-4	—	—	—	—	—	—
Three-pole copper		6-169-5	—	—	—	—	—	—
Arc Shield								
Right-hand		73-2676-2	62-791	62-791	62-793	62-840	62-840	62-804
Left-hand		73-2676	62-791-2	62-791-2	62-793-2	62-840-2	62-840-2	62-804
Coils								
Single-pole NO	100 V	9-1549-18	9-1583-15	9-1583-15	9-1589-10	9-1688-8	9-1688-8	9-547-7 ③
	115 V	9-1549-2	9-1583-2	9-1583-2	9-1589-2	9-1688-2	9-1688-2	9-547-7 ③
	230 V	9-1549-1	9-1583-1	9-1583-1	9-1589-1	9-1688-1	9-1688-1	9-547-4 ③
Single-pole NC	110 V	—	9-1585-18	9-1585-18	9-967-13	9-1717-4	—	—
	115 V	—	9-1585-2	9-1585-2	9-967-8	9-1717-1	—	—
	230 V	—	9-1585-1	9-1585-1	9-967-7	9-1717-2	—	—
Single-pole Ltl ②	100 V	9-1549-18	9-1583-15	9-1583-15	9-1589-10	9-1688-8	—	—
	115 V	9-1549-2	9-1583-2	9-1583-2	9-1589-2	9-1688-2	—	—
	230 V	9-1549-1	9-1583-1	9-1583-1	9-1589-1	9-1688-1	—	—
Two-pole	100 V	9-1585-18	—	—	—	—	—	—
	115 V	9-1585-2	—	—	—	—	—	—
	230 V	9-1585-1	—	—	—	—	—	—
Three-pole	110 V	9-1585-18	—	—	—	—	—	—
	115 V	9-1585-2	—	—	—	—	—	—
	230 V	9-1585-1	—	—	—	—	—	—

Technical Data and Specifications

- Current range: 5 to 1800 A
- Voltage: 600 Vdc
- Operation: magnetic
- Mounting: steel panel
- Mechanical life: 20 million operations
- Electrical life: 500,000 operations
- Interlock ratings:
  - 10 A continuous
  - 2.2 A inductive breaking at 115 V
  - 1.1 A inductive breaking at 230 V
- Continuous duty (for intermittent ratings consult factory)

Coil Ampere Data

NEMA Size	Number of Poles	100 Vdc Coil	115 Vdc Coil	230 Vdc Coil
2	1NO	0.288	0.263	0.125
	2NO	0.339	0.274	0.140
3	1NO	0.268	0.235	0.112
	1NC	0.339	0.274	0.140
4	1NO	0.268	0.235	0.112
	1NC	0.339	0.274	0.140

NEMA Size	Number of Poles	100 Vdc Coil	115 Vdc Coil	230 Vdc Coil
5	1NO	0.433	0.391	0.187
	1NC	0.424	0.329	0.164
6	1NO	0.450	0.365	0.200
	1NC	1.832/0.597 ④	1.337/0.485 ④	0.714/0.267 ④
6A	1NO	0.450	0.365	0.200
8	1NO	0.787 ⑤	0.757 ⑤	0.438 ⑤

Notes

① For prices refer to Eaton's parts distributor or call factory.
② Magnet closing coil only. If holdout coil is required, give number stamped on coil or advise bulletin or serial number of controller.
③ Series resistor used with coil for voltage shown.
④ Inrush/sealed current.
⑤ Coil used with series resistor.

Dimensions

Approximate Dimensions in Inches (mm)

Type C80 Contactors

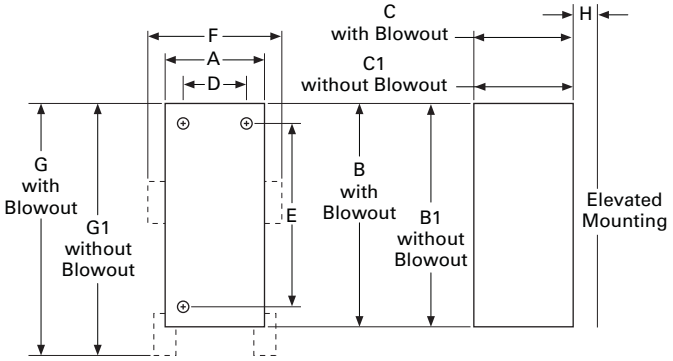

Open Type

Size	Poles	Wide A	High B	B1	Deep C	C1	Mounting D	Mounting E	With Auxiliary Contacts F	With Auxiliary Contacts G	With Auxiliary Contacts G1	H	Minimum Arc Clearance 250 V	Minimum Arc Clearance 600 V	Ship. Wt. Lb (kg)	Stud Size
Open Type DC Contactors																
2	1NO	3.00 (76.2)	8.38 (212.9)	6.50 (165.1)	6.00 (152.4)	5.38 (136.7)	2.25 (57.2)	4.50 (114.3)	7.38 (187.5)	10.88 (276.4)	9.13 (231.9)	—	0.59 (15.1)	0.91 (23.0)	6 (2.7)	1/4-20
	2NO	5.75 (146.1)	8.88 (225.6)	8.88 (225.6)	6.88 (174.8)	6.50 (165.1)	5.00 (127.0)	4.63 (117.6)	10.13 (257.3)	11.38 (289.1)	11.38 (289.1)	—	1.19 (30.2)	2.19 (55.6)	10 (4.5)	
	2NO-1NC	5.75 (146.1)	12.63 (320.8)	12.63 (320.8)	6.88 (174.8)	6.50 (165.1)	5.00 (127.0)	8.38 (212.9)	10.13 (257.3)	—	—	—	1.19 (30.2)	2.19 (55.6)	13 (5.9)	
3, 4	1NO	4.25 (108.0)	12.13 (308.1)	12.13 (308.1)	7.25 (184.2)	6.38 (162.1)	—	11.25 (285.8)	4.50 (114.3)	12.13 (308.1)	12.13 (308.1)	1.63 (41.4)	2.75 ① (69.9)	3.75 ② (95.3)	11 (5)	3/8-16
	1NC	4.25 (108.0)	13.63 (346.2)	13.63 (346.2)	7.25 (184.2)	5.63 (143.0)	—	12.75 (323.9)	5.00 (127.0)	13.63 (346.2)	13.63 (346.2)	1.63 (41.4)	4.25 ① (108.0)	5.25 ② (133.4)	13 (5.9)	
5	1NO	5.13 (130.3)	16.88 (428.8)	16.88 (428.8)	10.00 (254.0)	8.00 (203.2)	1.25 (31.8)	16.00 (406.4)	5.13 (130.3)	16.88 (428.8)	16.88 (428.8)	1.88 (47.8)	3.50 (88.9)	4.50 (114.3)	26 (12)	1/2-13
	1NC	5.25 (133.4)	18.88 (479.6)	16.88 (428.8)	10.00 (254.0)	7.50 (190.5)	1.25 (31.8)	18.00 (457.2)	6.13 (155.7)	18.88 (479.6)	18.88 (479.6)	1.88 (47.8)	3.00 (76.2)	4.00 (101.6)	34 (15)	
6	1NO	7.13 (181.1)	18.75 (476.3)	16.88 (428.8)	12.25 (311.2)	9.50 (241.3)	1.25 (31.8)	17.50 (444.5)	7.13 (181.1)	18.75 (476.3)	18.75 (476.3)	1.88 (47.8)	5.50 (139.7)	5.50 (139.7)	43 (20)	3/4-12
	1NC	7.25 (184.2)	22.88 (581.2)	18.88 (479.6)	12.25 (311.2)	9.88 (251.0)	1.25 (31.8)	22.00 (558.8)	7.25 (184.2)	22.88 (581.2)	22.88 (581.2)	1.88 (47.8)	5.50 (139.7)	5.50 (139.7)	66 (30)	
6A	1NO	7.63 (193.8)	18.75 (476.3)	18.75 (476.3)	12.25 (311.2)	9.50 (241.3)	1.25 (31.8)	17.50 (444.5)	7.63 (193.8)	18.75 (476.3)	18.75 (476.3)	1.88 (47.8)	5.50 (139.7)	5.50 (139.7)	45 (20)	3/4-12
8, 8A	1NO	9.50 (241.3)	24.00 (609.6)	22.5 (571.5)	17.00 (431.8)	14.88 (378.0)	7.00 (177.8)	10.00 (254.0)	9.50 (241.3)	24.00 (609.6)	24.00 (609.6)	2.00 (50.8)	8.00 (203.2)	10.0 (254.0)	130 (59)	1/2 hole
Definite Purpose Contactors																
260A	1NO	4.25 (108.0)	12.13 (308.1)	12.13 (308.1)	7.25 (184.2)	6.38 (162.1)	—	11.25 (285.8)	4.50 (114.3)	12.13 (308.1)	12.13 (308.1)	1.63 (41.4)	2.50 (63.5)	3.50 (88.9)	11 (5)	3/8-16
	1NC	4.25 (108.0)	13.63 (346.2)	13.63 (346.2)	7.25 (184.2)	5.63 (143.0)	—	12.75 (323.9)	5.00 (127.0)	13.63 (346.2)	13.63 (346.2)	1.63 (41.4)	2.50 (63.5)	3.50 (88.9)	13 (5.9)	
480A	1NO	5.13 (130.3)	16.88 (428.8)	16.88 (428.8)	10.00 (254.0)	8.00 (203.2)	1.25 (31.8)	16.00 (406.4)	5.13 (130.3)	16.88 (428.8)	16.88 (428.8)	1.88 (47.8)	3.00 (76.2)	4.00 (101.6)	26 (12)	1/2-13
	1NC	5.25 (133.4)	18.88 (479.6)	16.88 (428.8)	10.00 (254.0)	7.50 (190.5)	1.25 (31.8)	18.00 (457.2)	6.13 (155.7)	18.88 (479.6)	18.88 (479.6)	1.88 (47.8)	3.00 (76.2)	4.00 (101.6)	34 (15)	
960A	1NO	7.63 (193.8)	18.75 (476.3)	18.75 (476.3)	12.25 (311.2)	9.50 (241.3)	1.25 (31.8)	17.50 (444.5)	7.63 (193.8)	18.75 (476.3)	18.75 (476.3)	1.88 (47.8)	5.50 (139.7)	5.50 (139.7)	45 (20)	3/4-12

Notes

① May be reduced to 2.5 (63.5) for Size 3.

② May be reduced to 3.5 (88.9) for Size 3.

600V Contactors

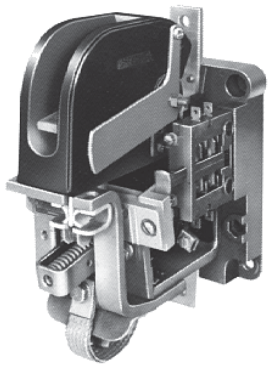

Contents

Description	*Page*
DC Contactors—Type C80	**V5-T4-67**
600V Contactors	
Product Selection	**V5-T4-75**
Accessories	**V5-T4-76**
Renewal Parts	**V5-T4-77**
Dimensions	**V5-T4-77**
DPM 750V Contactor	**V5-T4-78**
AVD–Contactor	**V5-T4-81**
D–Contactor	**V5-T4-84**
Reversing/Assignment Contactor	**V5-T4-87**

600V Contactors

Product Description

These DC Contactors are designed to handle rugged DC applications. They provide durable service and easy installation and maintenance.

Application Description

- Applications including mining, milling, cranes and transportation
- These contactors utilize DC coils

Note: Be sure to utilize a rectifier module if the only control voltage source available is 120 Vac.

Features

- Sturdy glass polyester base
- Knife edge bearings that guarantee precise operation and minimal wear
- High contact pressure
- Vacuum impregnated magnetic coil

Benefits

- Able to mount on steel or panels of any material for maximum flexibility
- Front or rear mounting available for convenient installation and maintenance
- Rapid arc quenching to ensure long life
- Easily accessible contact tips to remove and replace

Product Selection

When Ordering Specify

- Catalog number with appropriate coil suffix
- Any required accessories

600V Contactor

600V Contactors

Size	Open 8 Hour Ampere Rating	Contact Arrangement	Provisions for Interlocks Mechanical	Provisions for Interlocks Electrical	Magnet Coil Voltage	Catalog Number
Front Connected						
0	10	1NO	Yes	4	125 Vdc ①	**ME010C**
		2NO		2		**ME020C**
		1NO, 1NC		4		**ME011C**
		1NC		2		**ME001C**
1	25	1NO	Yes	4	125 Vdc ①	**ME110C**
		2NO		2		**ME120C**
		1NO, 1NC		4		**ME111C**
		1NC		2		**ME101C**
2	50	1NO	Yes	4	125 Vdc ①	**ME210C**
		2NO		2		**ME220C**
		1NO, 1NC		4		**ME211C**
		1NC		2		**ME201C**
3	100	1NO	Yes	4	125 Vdc ①	**ME310C**
		2NO		2		**ME320C**
		1NO, 1NC		4		**ME311C**
		1NC		2		**ME301C**
4	150	1NO	Yes	4	125 Vdc ①	**ME410C**
		2NO		2		**ME420C**
		1NO, 1NC		4		**ME411C**
		1NC		2		**ME401C**
Rear Connected						
0–4	10–150	—	—	—	—	**ME** ②

Notes

① Other coil voltages available, see **Page V5-T4-77**. Substitute suffix code of desired voltage for last digit in listed catalog number. Example: ME010**B**.

② For 10–150A rear connected contactors, order front connected ME contactor above and rear connection kit, catalog number 2184A10G08, (field installed only). See **Page V5-T4-77**.

Accessories

Auxiliary Contacts (Electrical Interlocks)—For Field Installation Only ①

Auxiliary Contact Type	Application	Contact Arrangement ②	Number of Auxiliary Contacts	Auxiliary Contacts Factory Installed ① Catalog Number	Auxiliary Contacts Unmounted Replacement Only Catalog Number	Mounting and Operating Hardware for New Applications Catalog Number
L46	ME01 only	NO–FC	1	**11A8713G10**	**11A8713G10**	None required
		NC–FC		**11A8713G09**	**11A8713G09**	None required
	ME10 only	NC–FC–OB	1	**487B878G01**	**487B878G01**	None required
	ME10, ME11, ME20, ME30, ME31, ME40 and ME41	NO–FC	1	**11A8713G09**	**11A8713G09**	None required
		NC–FC		**11A8713G10**	**11A8713G10**	None required
L66	ME10, ME11, ME20, ME30, ME31, ME40 and ME41	DB–FC–L	1	**659C301G04**	**659C301G04**	None required
		DB–FC–R		**659C301G05**	**659C301G05**	None required
	ME10 Only	DB–FC–L–OB	1	**487B878G06**	**487B878G06**	None required
		DB–FC–R–OB		**487B878G07**	**487B878G07**	None required

Standard Magnet Coil Suffix

Voltage	Suffix Code
65 Vdc (ME Size 0–4 only)	**A**
115 Vdc	**B**
125 Vdc	**C**
230 Vdc	**D**
250 Vdc	**E**
550 Vdc	**F**
Other	**G**

Rear Connector Kit for ME Contactors ③

Catalog Number
2184A10G08

Accessory Option

Description
Rectifier for AC Operation Order by description

Mechanical Interlocks, Unmounted

Type	Contactor Type	Size	Contacts	Catalog Number
M-25	ME	All	1NO, 1NO + 1NC	**878D400G01**
M-25	ME	All	2NO, 2NO + 1NC	**878D401G01**

Notes

① For factory installed electrical interlocks, consult factory.
② NO = Normally Open, NC = Normally Closed, DB = Delayed Break, FC = Front Connected, L = Left Hand, R = Right Hand, OB = Outboard (for single-pole, Size 2 frame).
③ Field installation only.

Renewal Parts

ME Series

Kits

	One NO Pole		Two NO Poles		One NC Pole		One NO/NC Pole	
Description	**Qty.**	**Part Number**	**Qty.**	**Part Number**	**Qty.**	**Part Number**	**Qty.**	**Part Number**
Contact kit	1	**2184A10G14**	2	**2184A10G14**	1	**2184A10G14**	2	**2184A10G14**
Arc box 10/25/50A	1	**2184A10G09**	2	**2184A10G09**	1	**2184A10G09**	2	**2184A10G09**
Arc box 100/150A	1	**2184A10G10**	2	**2184A10G10**	1	**2184A10G10**	2	**2184A10G10**
Shunt kit	1	**2184A10G21**	1	**2184A20G16**	1	**2084A01G07**	1	**2184A11G07**
Armature kit	1	**2184A10G19**	1	**2184A20G15**	1	**2084A01G06**	1	**2184A11G06**
Blowout Assembly								
10A	1	**2184A10G15**	1	**2184A20G11**	1	**2184A10G15**	2	**2184A10G15**
25A	1	**2184A10G16**	1	**2184A20G12**	1	**2184A10G16**	2	**2184A10G16**
50A	1	**2184A10G17**	1	**2184A20G13**	1	**2184A10G17**	2	**2184A10G17**
110/150A	1	**2184A10G18**	1	**2184A20G14**	1	**2184A10G18**	2	**2184A10G18**
Rear conn. kit	1	**2184A10G08**	1	**2184A10G08**	1	**2184A10G08**	1	**2184A10G08**

Coils

	Operating Coils	Holding Coils (Lower)—1NO-1NC Contactors Only ①	
	10/25/50/100/150 Ampere Sizes	10/25/50 Ampere Sizes	100/150 Ampere Sizes
Voltage	**Part Number**	**Part Number**	**Part Number**
65V	**30B4376G06**	**44A6366G10**	**30B4376G27**
90/92V	**30B4376G25**	**44A6366G12**	**427C048G16**
115V	**30B4376G07**	**44A6366G13**	**30B4376G01**
125V	**30B4376G08**	**44A6366G19**	**30B4376G26**
230/240V	**30B4376G09**	**44A6366G15**	**30B4376G02**
250V	**30B4376G10**	**44A6366G23**	**30B4376G17**
500V	**30B4376G14**	**N/A**	**N/A**
550V	**30B4376G11**	**44A6366G18**	**30B4376G03**

Dimensions

Approximate Dimensions in Inches (mm)

600V Contactors

Contactor Size	Contact Arrangement	Width	Height	Depth	Shipping Weight Lbs (kg)
Front Connected					
0–2	1NO	3.18 (80.8)	7.56 (192.0)	6.81 (173.0)	8.0 (3.6)
	2NO	5.53 (140.5)	6.75 (171.5)	6.81 (173.0)	10.0 (4.5)
	1NO, 1NC	3.67 (93.2)	12.44 (316.0)	6.81 (173.0)	12.0 (5.4)
	1NC	3.67 (93.2)	9.57 (243.1)	6.81 (173.0)	10.0 (4.5)
3–4	1NO	3.18 (80.8)	7.78 (197.6)	6.81 (173.0)	8.0 (3.6)
	2NO	5.53 (140.5)	7.44 (189.0)	6.81 (173.0)	10.0 (4.5)
	1NO, 1NC	3.67 (93.2)	12.88 (327.2)	6.81 (173.0)	12.0 (5.4)
	1NC	3.67 (93.2)	9.69 (246.1)	6.81 (173.0)	10.0 (4.5)

Note

① If lower coils are required, order separately.

DPM 750V Contactor

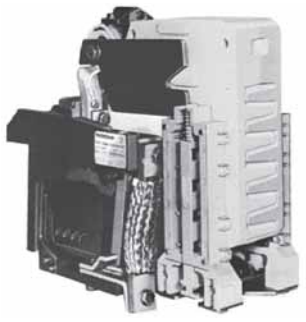

Contents

Description	*Page*
DC Contactors—Type C80	**V5-T4-67**
600V Contactors	**V5-T4-74**
DPM 750V Contactor	
Product Selection	**V5-T4-79**
Accessories	**V5-T4-79**
Renewal Parts	**V5-T4-79**
Technical Data and Specifications	**V5-T4-80**
Dimensions	**V5-T4-80**
AVD–Contactor	**V5-T4-81**
D–Contactor	**V5-T4-84**
Reversing/Assignment Contactor	**V5-T4-87**

DPM 750V Contactor

Product Description

The DPM 750 Vdc Definite Purpose Contactor has been designed to meet severe environmental and vibration conditions found in your worst applications. The contactor is of unit construction, assembled on a molded insulated base, providing maximum performance in minimum space.

Application Description

This rugged device was designed for applications such as railway equipment, offshore drilling, mining, off-road vehicles, marine, and so on.

Features

- Power circuit insulating barriers are molded from glass-polyester materials having high arc and track resisting qualities
- The DPM is designed to mount directly on a channel or angle frame, but may be adapted for mounting on a flat metal or insulated panel
- Available with or without an overcurrent latching mechanism to prevent opening under heavy overload currents. When the line current returns to normal, the overcurrent latch disengages

Benefits

- Saves panel space by locating the arc chute vents on the front of the unit. This eliminates the need for arcing clearance above the contactor
- All vital parts are removable from the front without having to disconnect line or load connections, allowing for easy maintenance
- Safety is a must. The mechanical interlock prevents the contactor from closing when the arc box has been removed or when it is not installed properly

Product Selection

When Ordering Specify

- Catalog number of contactor and any required accessories

750 Vdc Contactor

750 Vdc Contactors

Coil Operating Voltage ①	Over-Current Latch	Catalog Number
28 Vdc	Without	**2120A07G01** ②
	With	**2120A07G02** ②
36 Vdc	Without	**2120A07G03** ②
	With	**2120A07G04** ②
55 Vdc	Without	**2120A07G05** ②
	With	**2120A07G06** ②

Coil Operating Voltage ①	Over-Current Latch	Catalog Number
74 Vdc	Without	**2120A07G09** ②
	With	**2120A07G10** ②
110 Vdc	Without	**2120A07G13** ②
	With	**2120A07G14** ②
125 Vdc	Without	**2120A07G17** ②
	With	**2120A07G18** ②

Accessories

Extra L-67 Auxiliary Contacts—Order Separately

Contact Combination Provided by One Auxiliary Contact Assembly		Field Installed Kit
Normally Open	Normally Closed	Catalog Number
0	4	**2087A40G11**
1	3	**2087A40G12**
2	2	**2087A40G13**
3	1	**2087A40G14**
4	0	**2087A40G15**

Mechanical Interlock Kit

Description	Catalog Number
Mechanical Horizontal Interlock Kit Includes mounting instructions and mounting hardware ③	**1954D13G01**

Renewal Parts

DPM Contactor

Description	Catalog Number
Contact Kit	**2131A94G10**
Arc Box	**2131A94G03**
Shunt	**3534C86G01**
Coils	
28 Vdc	**2114A92G04**
36 Vdc	**2114A92G05**
55 Vdc	**2114A92G06**
74 Vdc	**2114A92G09**
110/115 Vdc	**2114A92G14**
125 Vdc	**2114A92G15**
275 Vdc	**2114A92G16**
600 Vdc	**2114A92G20**

Notes

① For other coil operating voltages, contact Eaton Technical Resource Center.
② Includes factory installed 2NO/2NC auxiliary contacts.
③ When interlock kit is installed, only one L-67 auxiliary contact can be mounted on each DPM contactor.

Technical Data and Specifications

DPM Contactor

Description	Specification
Line voltage	750 Vdc
Continuous current rating	
Carrying and interrupting capacity	1250A
Operating coil	
Duty rating	Continuous
Operation	Will operate at 80–110% of rated voltage
Insulation between power circuit and operating coil	Rated 750 Vdc
Arcing and creepage distances	Meet or exceed NEMA standards for 750V equipment
Blowout coil	Rated for continuous duty

Dimensions

Approximate Dimensions in Inches (mm)

DPM Contactor

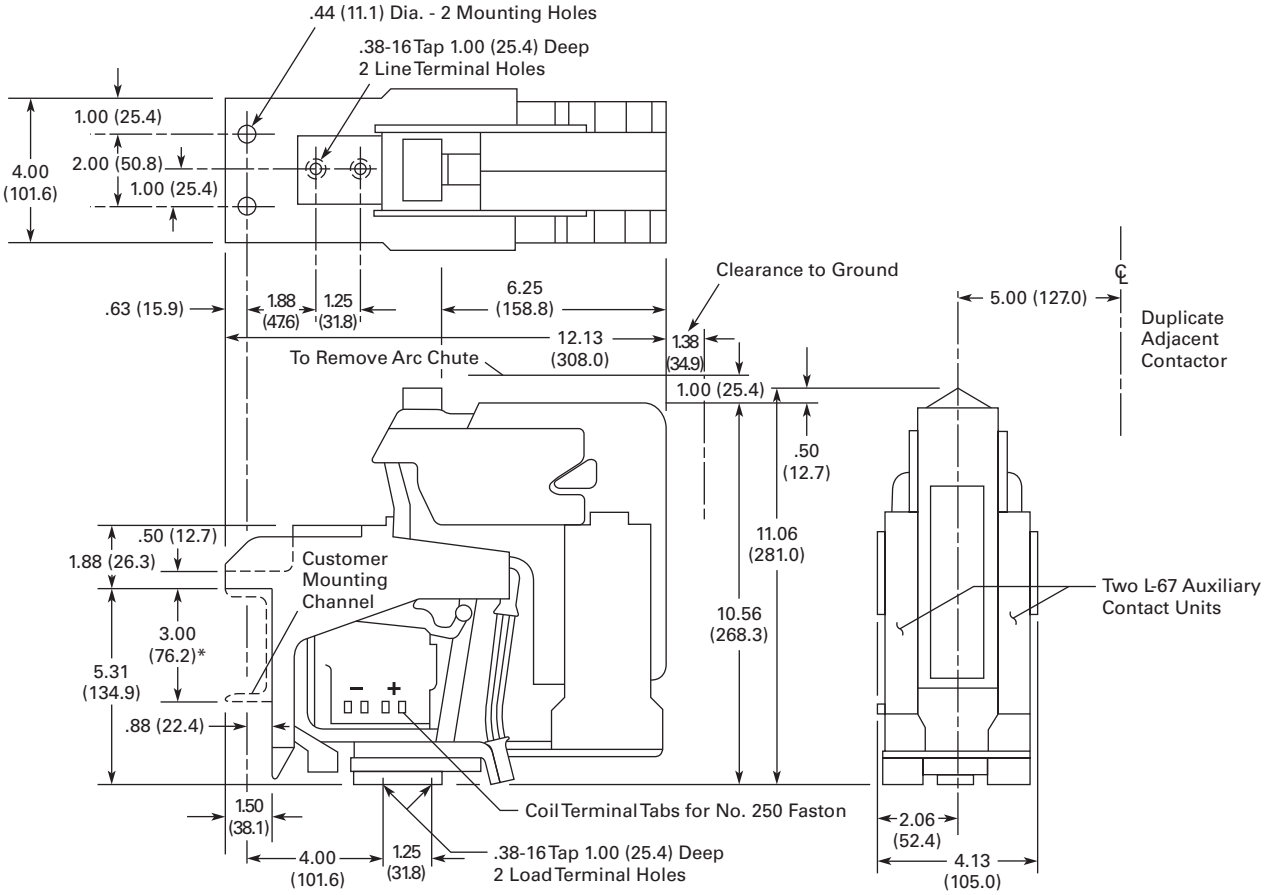

*This dimension must not be exceeded or flashover may occur.

Width	Height	Depth	Shipping Weight Lbs (kg)
4.13 (105)	11.06 (280.9)	12.12 (307.8)	30.5 (13.8)

AVD–Contactor

Contents

Description	*Page*
DC Contactors—Type C80	**V5-T4-67**
600V Contactors	**V5-T4-74**
DPM 750V Contactor	**V5-T4-78**
AVD–Contactor	
Product Selection	**V5-T4-82**
Accessories	**V5-T4-82**
Renewal Parts	**V5-T4-82**
Technical Data and Specifications	**V5-T4-83**
Dimensions	**V5-T4-83**
D–Contactor	**V5-T4-84**
Reversing/Assignment Contactor	**V5-T4-87**

AVD–Contactor

Product Description

The AVD–Contactor is a single-pole normally open, load break, bi-directional definite purpose DC contactor. The device is rated at 1400 amps continuous and is capable of switching up to 2000 Vdc loads.

Application Description

The AVD–Contactor was designed for the demanding environmental requirements of locomotive, rapid transit and off highway vehicle applications. This device is also applied in high horsepower DC drive applications including process lines and off shore oil drilling rigs.

Features

- Bi-directional interrupting capability
- 2000 Vdc switching in a compact design due to arc chute
- Any combination of up to four isolated NO or NC auxiliary contacts
- Panel mount design
- Continuous duty operating coil
- Continuous duty blow out coil

Product Selection

When Ordering—Contact Technical Resource Center

- Product specification: The AVD-contactor is a definite purpose DC contactor
- Please consult our Technical Resource Center for catalog numbers of other device configurations and application assistance

1400A Contactor

AVD–Contactor

Device Type	Auxiliary Contact Configuration	Coil Voltage	Catalog Number
1400A contactor	3NO/1NC	28	**6702ED667-4**
		37	**6702ED667-5**
		74	**6702ED667-6**
		100	**6702ED667-3**
		230	**6702ED667-7**

Accessories

Auxiliary Contacts

Contact Configuration	Terminal Configuration	Catalog Number
1NO/1NC	Fast-on	**10-3519-5**
2NO	Fast-on	**10-3519-6**
2NC	Fast-on	**10-3519-7**
1NO/1NC	Screw type	**10-6817**
2NO	Screw type	**10-6817-2**
2NC	Screw type	**10-6817-3**

Renewal Parts

Contacts

Description	Quantity Required per Contactor	Catalog Number
Stationary contact	1	**23-7253**
Movable contact	2	**23-7255**

Technical Data and Specifications

AVD-Contactor

Description	Specification
Current carrying capability at 55°C	1400A continuous
Electrical creepage and clearance distances	Up to 2000 Vdc applications
Mechanical life	2 million operations
Operating coil voltages (DC)	28, 37, 74, 100, 230 (others available)

Operating Coil Characteristics

Coil Voltage	Current Draw at Nominal Voltage (±5% at 20°C)	Catalog Number
28	1.87	**9-3004-2**
37	1.58	**9-3004-3**
74	0.79	**9-3004-1**
100	0.62	**9-3004-5**
230	0.25	**9-3004-4**

Dimensions

Approximate Dimensions in Inches (mm)

AVD-Contactor

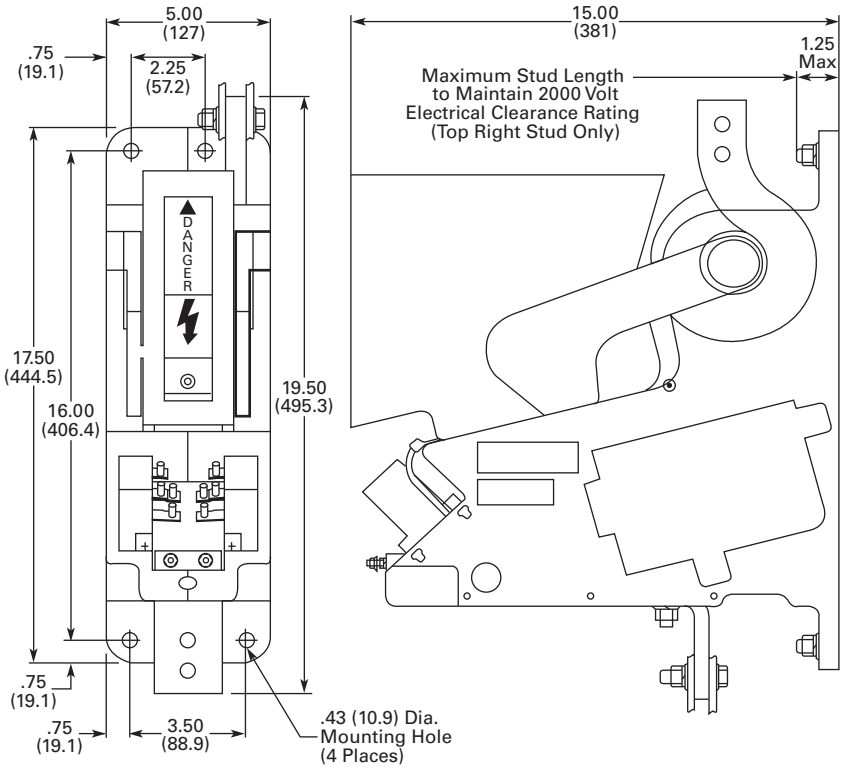

Width	Height	Depth	Shipping Weight Lbs (kg)
15.0 (381.0)	19.5 (495.3)	5.0 (127.0)	70 (31.8)

Arc Clearances

Front	Top	Sides
2 (51)	2 (51)	1 (25)

D–Contactor

Contents

Description	*Page*
DC Contactors—Type C80	**V5-T4-67**
600V Contactors	**V5-T4-74**
DPM 750V Contactor	**V5-T4-78**
AVD–Contactor	**V5-T4-81**
D–Contactor	
Product Selection	**V5-T4-85**
Accessories	**V5-T4-85**
Renewal Parts	**V5-T4-85**
Technical Data and Specifications	**V5-T4-86**
Dimensions	**V5-T4-86**
Reversing/Assignment Contactor	**V5-T4-87**

D–Contactor

Product Description

The D–Contactor is a single-pole normally open, load break, bi-directional definite purpose DC contactor. Two devices are available rated at 1800A and 3000A at 750 Vdc.

Application Description

The D–Contactor was designed for the demanding environmental requirements of locomotive, rapid transit and off highway vehicle applications. This device is also widely applied in high horsepower DC drive applications including process lines and off shore oil drilling rigs.

Features

- Bi-directional interrupting capability
- Compact design due to intermittent duty blowout coil and arc interruption circuit (not suitable for extremely high duty cycle or jogging applications)
- Any combination of up to eight isolated NO or NC auxiliary contacts
- Channel/angle frame mounting standard, optional panel mount kit available
- Continuous duty operating coil
- Screw type or fast-on control terminals

Product Selection

When Ordering—Contact Technical Resource Center

- Product specification: The D-contactor is a definite purpose DC contactor
- Please consult our Technical Resource Center for catalog numbers of other device configurations and application assistance

1800A Contactor

D–Contactor

Device Type	Auxiliary Contact Configuration	Coil Voltage	Catalog Number
1800A contactor	3NO/1NC	74 Vdc	**6702ED584**
	3NO/1NC	100 Vdc	**6702ED663**
	2NO/2NC	115 Vdc	**6702ED584-2**
3000A contactor	3NO/1NC	74 Vdc	**6702ED587-2**
	2NO/2NC	100 Vdc	**6702ED668**
	3NO/1NC	115 Vdc	**6702ED587-4**

Accessories

Auxiliary Contacts

Contact Configuration	Terminal Configuration	Catalog Number
1NO/1NC	Fast-on	**10-3519-5**
2NO	Fast-on	**10-3519-6**
2NC	Fast-on	**10-3519-7**
1NO/1NC	Screw type	**10-6817**
2NO	Screw type	**10-6817-2**
2NC	Screw type	**10-6817-3**

Panel Mounting Kit

Description	Catalog Number
Panel mounting kit	**99-3842**

Renewal Parts

Contact Kits

Device Rating	Main Contact Configuration	Contacts	Catalog Number
1800A	2-Main	Main contacts	**6-497**
1800A	2-Main	Arcing contacts	**23-5449**
3000A	4-Main	Main contacts	**6-496**
3000A	4-Main	Arcing contacts	**23-5448**

Technical Data and Specifications

D–Contactor

Description	Specification
Current carrying capability at 55°C	1800A and 3000A continuous
Resistive interrupt rating	5000A 750 Vdc
Electrical creepage and clearance distances	Up to 1500 Vdc applications
Mechanical life	2 million operations
Operating coil voltages (DC)	12, 24, 32, 48, 74, 100, 115, 230 (others available)

Operating Coil Characteristics

Coil Voltage	Current Draw at Nominal Voltage (±7.5% at 20°C)	Catalog Number
12	3.96	**9-1688-15**
24	2.00	**9-1688-7**
32	1.44	**9-1688-9**
48	1.00	**9-1688-12**
74	0.97	**9-2064-3**
100	0.45	**9-1688-8**
115	0.37	**9-1688-2**
230	0.20	**9-1688-1**

Dimensions

Approximate Dimensions in Inches (mm)

D–Contactor

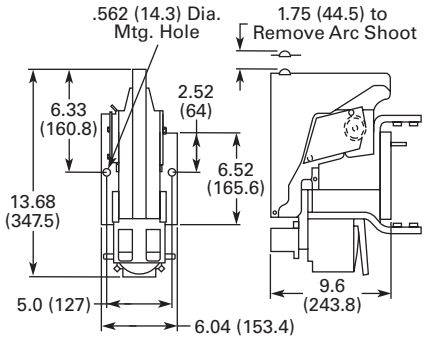

Width	Height	Depth	Shipping Weight Lbs (kg)
9.6 (243.8)	13.68 (347.5)	6.04 (153.4)	43 (19.5)

Arc Clearances

Type of Load	750V Front	Top	Sides
Resistive	4 (102)	2 (51)	3 (76)
Inductive	7 (178)	4 (102)	3 (76)

Reversing/Assignment Contactor

Contents

Description	*Page*
DC Contactors—Type C80	**V5-T4-67**
600V Contactors	**V5-T4-74**
DPM 750V Contactor	**V5-T4-78**
AVD–Contactor	**V5-T4-81**
D–Contactor	**V5-T4-84**
Reversing/Assignment Contactor	
Product Selection	**V5-T4-88**
Accessories	**V5-T4-88**
Renewal Parts	**V5-T4-88**
Technical Data and Specifications	**V5-T4-89**
Dimensions	**V5-T4-89**

Reversing/Assignment Contactor

Product Description

The Reversing/Assignment Contactor is a two-pole, double-throw non-load break definite purpose DC contactor. A three-position center-off and a two-position magnetically-latched configuration is available. The device is rated for 1100A, 1000 Vdc. The Reversing Contactor includes cross over busbars for DC motor reversing applications; the Assignment Contactor omits the cross over busbars for motor assignment applications. (See **Page V5-T4-89**.)

Application Description

The Reversing/Assignment Contactor was designed for the demanding environmental requirements of off highway vehicle applications. This device is also widely utilized with high horsepower DC drives for DC motor reversing and drive assignment applications.

Features

- Bi-directional current carrying capability (non-load break)
- Can replace four single-pole contactors in DC motor reversing applications
- Can replace two or four single-pole contactors in DC motor assignment applications
- Any combination of up to eight isolated NO or NC auxiliary contacts
- Panel mount design
- Continuous duty operating coil
- Screw type or fast-on control terminals

Product Selection

When Ordering—Contact Technical Resource Center

- Product specification: The Reversing/assignment contactor is a definite purpose DC contactor
- Please consult our Technical Resource Center for catalog numbers of other device configurations and application assistance

1000V Contactor

Reversing/Assignment Contactor (Three-Position, Center OFF)

Device Type	Auxiliary Contact Configuration	Coil Voltage	Catalog Number
Reverser	8NO	74	**6702ED615**
	4NO/4NC	125	**6702ED621-2**
		250	**6702ED622**
Assignment	4NO/4NC	74	**6702ED664-2**
		125	**6702ED621**
		250	**6702ED664-6**

Accessories

Auxiliary Contacts

Contact Configuration	Terminal Configuration	Catalog Number
1NO/1NC	Fast-on	**10-3519-5**
2NO	Fast-on	**10-3519-6**
2NC	Fast-on	**10-3519-7**
1NO/1NC	Screw type	**10-6817**
2NO	Screw type	**10-6817-2**
2NC	Screw type	**10-6817-3**

Renewal Parts

Contact Kits

Device	Configuration	Catalog Number
Reversing/assignment	Three-position	**6-602**
Reversing/assignment upgrade kit ①	Three-position	**6-602-3**
Magnetic latched reversing/assignment	Two-position	**6-602-5**

Note

① The 6-602-3 contact kit will upgrade the three-position, reversing/assignment device from the original design that incorporated a leaf spring contact structure to the present design that incorporates a coil spring contact structure. The 6-602 contact kit can then be used after the device has been upgraded for subsequent contact replacement.

Technical Data and Specifications

Reversing/Assignment Contactor

Description	Specification
Current carrying capability at 55°C	1100A continuous
Electrical creepage and clearance distances	For 1000 Vdc applications
Mechanical life	1 million operations
Operating coil voltages (DC)	24, 28, 36, 74, 110, 125, 250 (others available)

Operating Coil Characteristics

Coil Voltage	Current Draw at Nominal Voltage (±7.5% at 20°C)	Catalog Number
24	1.60	**9-1903-9**
28	1.30	**9-1903-1**
36	1.06	**9-1903-3**
74	0.49	**9-1903-7**
110	0.33	**9-1903-6**
125	0.33	**9-1903-4**
250	0.17	**9-1903-8**

Reversing Contactor Schematic Diagram

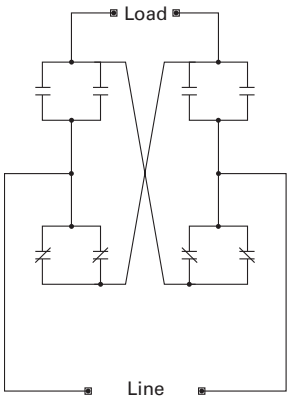

The reversing contactor includes the cross over busbars for DC motor reversing applications. The assignment contactor omits the cross over busbars for motor assignment applications.

Dimensions

Approximate Dimensions in Inches (mm)

Reversing Contactor

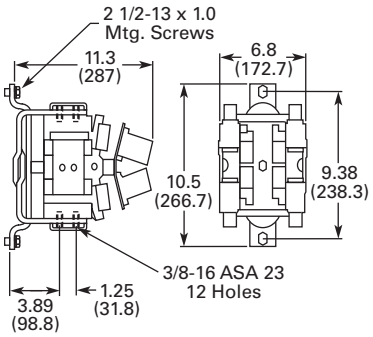

Width	Height	Depth	Shipping Weight Lbs (kg)
11.3 (287)	10.5 (266.7)	6.8 (172.7)	45 (20.4)

Ampere Rating of AC Motors

Ampere ratings of motors vary somewhat, depending upon the type of motor. The values given below are for drip-proof, Class B insulated (T Frame) where available, 1.15 service factor, NEMA Design B motors. These values represent an average full load motor current which was calculated from the motor performance data published by several motor manufacturers. In the case of high torque squirrel cage motors, the ampere ratings will be at least 10% greater than the values given below.

Caution—These average ratings could be high or low for a specific motor and therefore heater coil selection on this basis always involves risk. For fully reliable motor protection, select heater coils on the basis of full load current rating as shown on the motor nameplate.

Ampere Ratings of Three-Phase, 60 Hz, AC Induction Motor

hp ①	Syn. Speed RPM	Current in Amperes 200V	230V	380V ②	460V	575V	2200V
1/4	1800	1.09	0.95	0.55	0.48	0.38	—
	1200	1.61	1.4	0.81	0.7	0.56	—
	900	1.84	1.6	0.93	0.8	0.64	—
1/3	1800	1.37	1.19	0.69	0.6	0.48	—
	1200	1.83	1.59	0.92	0.8	0.64	—
	900	2.07	1.8	1.04	0.9	0.72	—
1/2	1800	1.98	1.72	0.99	0.86	0.69	—
	1200	2.47	2.15	1.24	1.08	0.86	—
	900	2.74	2.38	1.38	1.19	0.95	—
3/4	1800	2.83	2.46	1.42	1.23	0.98	—
	1200	3.36	2.92	1.69	1.46	1.17	—
	900	3.75	3.26	1.88	1.63	1.3	—
1	3600	3.22	2.8	1.7	1.4	1.12	—
	1800	4.09	3.56	2.06	1.78	1.42	—
	1200	4.32	3.76	2.28	1.88	1.5	—
	900	4.95	4.3	2.6	2.15	1.72	—
1-1/2	3600	5.01	4.36	2.64	2.18	1.74	—
	1800	5.59	4.86	2.94	2.43	1.94	—
	1200	6.07	5.28	3.2	2.64	2.11	—
	900	6.44	5.6	3.39	2.8	2.24	—
2	3600	6.44	5.6	3.39	2.8	2.24	—
	1800	7.36	6.4	3.87	3.2	2.56	—
	1200	7.87	6.84	4.14	3.42	2.74	—
	900	9.09	7.9	4.77	3.95	3.16	—
3	3600	9.59	8.34	5.02	4.17	3.34	—
	1800	10.8	9.4	5.7	4.7	3.76	—
	1200	11.7	10.2	6.2	5.12	4.1	—
	900	13.1	11.4	6.9	5.7	4.55	—
5	3600	15.5	13.5	8.2	6.76	5.41	—
	1800	16.6	14.4	8.74	7.21	5.78	—
	1200	18.2	15.8	9.59	7.91	6.32	—
	900	18.3	15.9	9.6	7.92	6.33	—

Notes

① To convert horsepower to kW, multiply horsepower by 0.7457.

② 380V 50 Hz.

Ampere Ratings of Three-Phase, 60 Hz, AC Induction Motor, continued

hp ①	Syn. Speed RPM	Current in Amperes 200V	230V	380V ②	460V	575V	2200V
7-1/2	3600	22.4	19.5	11.8	9.79	7.81	—
	1800	24.7	21.5	13	10.7	8.55	—
	1200	25.1	21.8	13.2	10.9	8.7	—
	900	26.5	23	13.9	11.5	9.19	—
10	3600	29.2	25.4	15.4	12.7	10.1	—
	1800	30.8	26.8	16.3	13.4	10.7	—
	1200	32.2	28	16.9	14	11.2	—
	900	35.1	30.5	18.5	15.2	12.2	—
15	3600	41.9	36.4	22	18.2	14.5	—
	1800	45.1	39.2	23.7	19.6	15.7	—
	1200	47.6	41.4	25	20.7	16.5	—
	900	51.2	44.5	26.9	22.2	17.8	—
20	3600	58	50.4	30.5	25.2	20.1	—
	1800	58.9	51.2	31	25.6	20.5	—
	1200	60.7	52.8	31.9	26.4	21.1	—
	900	63.1	54.9	33.2	27.4	21.9	—
25	3600	69.9	60.8	36.8	30.4	24.3	—
	1800	74.5	64.8	39.2	32.4	25.9	—
	1200	75.4	65.6	39.6	32.8	26.2	—
	900	77.4	67.3	40.7	33.7	27	—
30	3600	84.8	73.7	44.4	36.8	29.4	—
	1800	86.9	75.6	45.7	37.8	30.2	—
	1200	90.6	78.8	47.6	39.4	31.5	—
	900	94.1	81.8	49.5	40.9	32.7	—
40	3600	111	96.4	58.2	48.2	38.5	—
	1800	116	101	61	50.4	40.3	—
	1200	117	102	61.2	50.6	40.4	—
	900	121	105	63.2	52.2	41.7	—
50	3600	138	120	72.9	60.1	48.2	—
	1800	143	124	75.2	62.2	49.7	—
	1200	145	126	76.2	63	50.4	—
	900	150	130	78.5	65	52	—
60	3600	164	143	86.8	71.7	57.3	—
	1800	171	140	90	74.5	59.4	—
	1200	173	150	91	75	60	—
	900	177	154	93.1	77	61.5	—
75	3600	206	179	108	89.6	71.7	—
	1800	210	183	111	91.6	73.2	—
	1200	212	184	112	92	73.5	—
	900	222	193	117	96.5	77.5	—

Notes

① To convert horsepower to kW, multiply horsepower by 0.7457.

② 380V 50 Hz.

Ampere Ratings of Three-Phase, 60 Hz, AC Induction Motor, continued

hp ①	Syn. Speed RPM	Current in Amperes 200V	230V	380V ②	460V	575V	2200V
100	3600	266	231	140	115	92.2	—
	1800	271	236	144	118	94.8	23.6
	1200	275	239	145	120	95.6	24.2
	900	290	252	153	126	101	24.8
125	3600	—	292	176	146	116	—
	1800	—	293	177	147	117	29.2
	1200	—	298	180	149	119	29.9
	900	—	305	186	153	122	30.9
150	3600	—	343	208	171	137	—
	1800	—	348	210	174	139	34.8
	1200	—	350	210	174	139	35.5
	900	—	365	211	183	146	37
200	3600	—	452	257	226	181	—
	1800	—	458	265	229	184	46.7
	1200	—	460	266	230	184	47
	900	—	482	279	241	193	49.4
250	3600	—	559	338	279	223	—
	1800	—	568	343	284	227	57.5
	1200	—	573	345	287	229	58.5
	900	—	600	347	300	240	60.5
300	1800	—	678	392	339	271	69
	1200	—	684	395	342	274	70
400	1800	—	896	518	448	358	91.8
500	1800	—	1110	642	555	444	116

Notes

① To convert horsepower to kW, multiply horsepower by 0.7457.

② 380V 50 Hz.