Dimensões em polegada
Dimensions in inches

THIS IS AN UPDATED REVISION, THE PREVIOUS ONE MUST BE DISREGARDED.

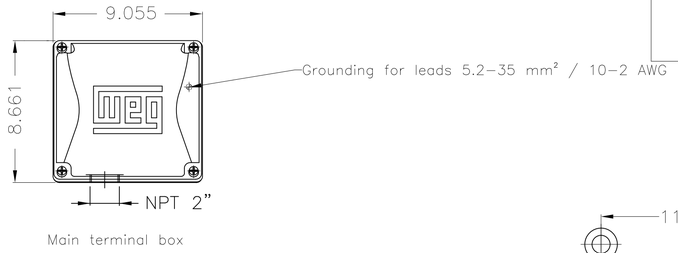

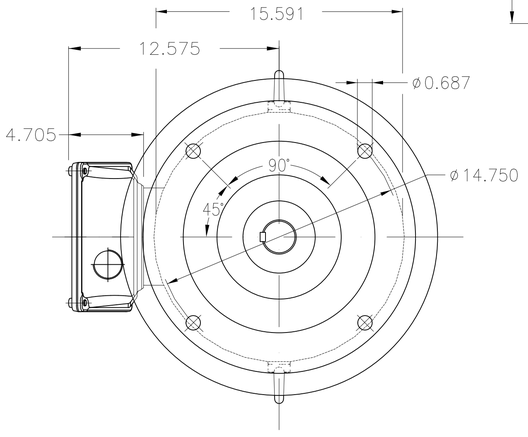

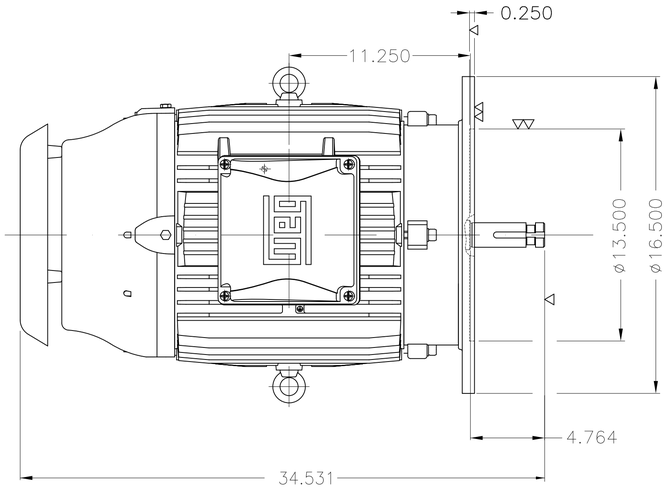

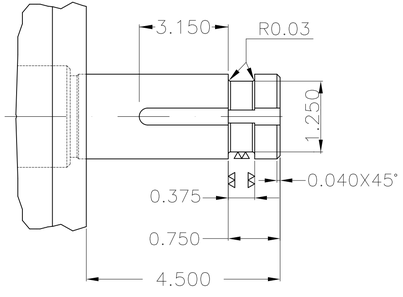

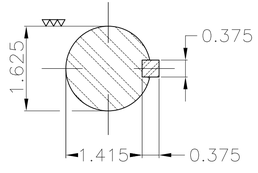

Color RAL 5009
Painting plan 203A
Mounting V1

ECM	LOC	SUMMARY OF MODIFICATIONS	EXECUTED	CHECKED	RELEASED	DATE	VER

EXECUTED	USERADMIN	THREE PHASE W22 P-BASE MOTOR PREMIUM EFF			
CHECKED		FRAME 326HP IP55 TEFC			
RELEASED		P. BASE | WEG code: 13016682			
REL DT	27.01.2018	WMO	Jaragua do Sul	Product Engineering	SHEET 1 / 1

50 HP 04 Poles 60Hz

A3 ZME

WEG's property. Forbidden reproduction without previous authorization.