EIXO/SHAFT	
PADRÃO/STANDARD	X
OPCIONAL/OPTIONAL	
ESPECIAL/SPECIAL	

Dimensões em mm
Dimensions in mm

CERTIFIED
WEG MOTORES
Certified document.
Not subject to changes.

THIS IS AN UPDATED REVISION, THE PREVIOUS ONE MUST BE DISREGARDED.

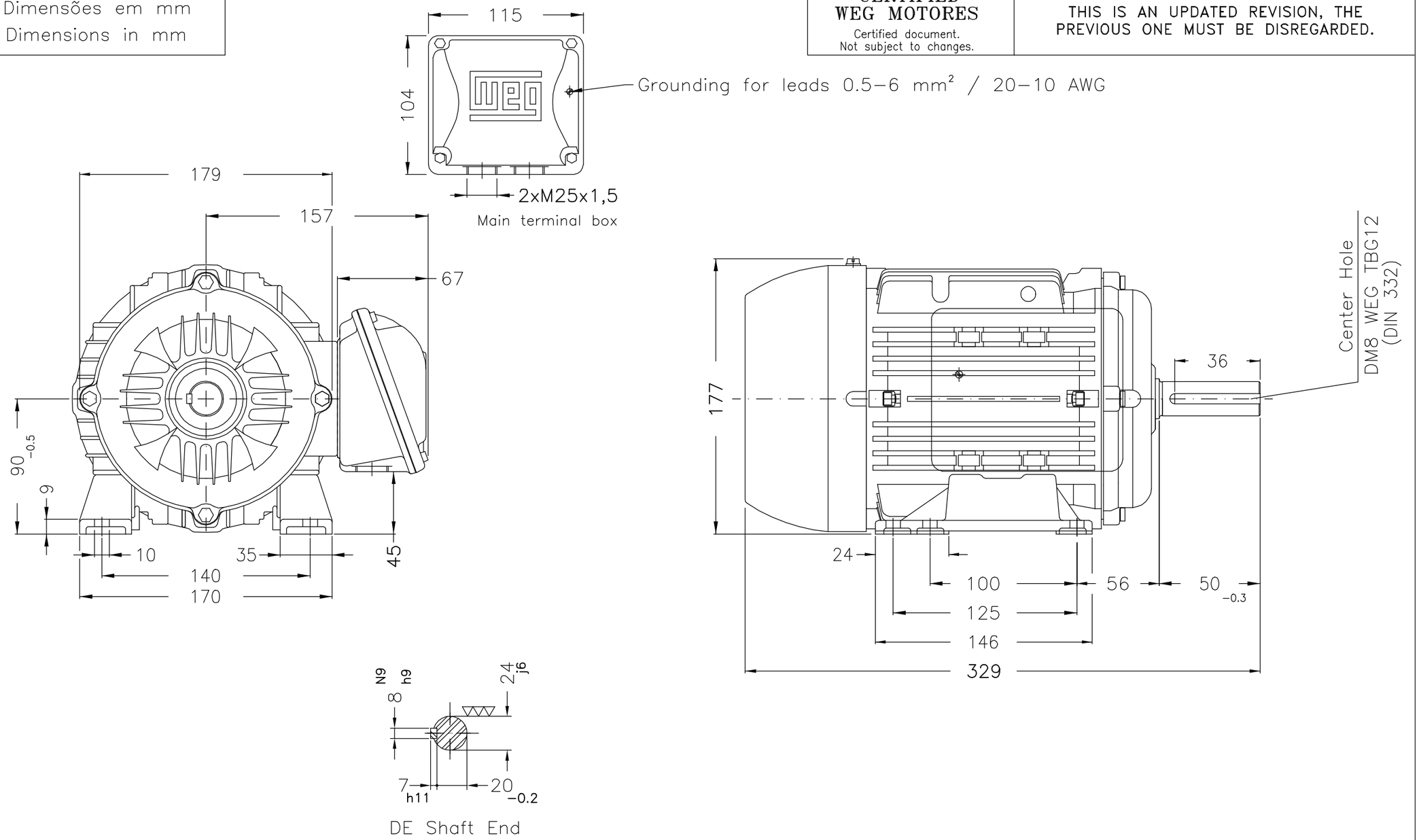

Caixa de ligação W22 / W22 terminal box
Cor RAL 5009 / Color RAL 5009
Plano de pintura 207A / Painting plan 207A
Forma construtiva B3E / Mounting B3L(E)

WEG ELECTRIC CORPORATION - WEC

ECM ECM	LOC LOC	RESUMO MODIFICAÇÃO SUMMARY OF MODIFICATIONS	EXECUTADO EXECUTED	VERIFICADO CHECKED	LIBERADO RELEASED	DATA DATE	VER VER
500001291622		DOCUMENTO NOVO	DVEGINI		NSCHMIDT	28.03.2017	00

EXEC. /EXECUTED	DVEGINI	THREE PHASE MOTOR TRU-METRIC P. EFF AL	10004852098
VERIF. /CHECKED		FRAME 90S/L IP55 TEFC	000 / 00
LIBER. /RELEASED	NSCHMIDT		
DATA LB /REL DT	28.03.2017	WMO Jaragua do Sul Product Engineering	FOLHA/SHEET 1 / 1

2 HP 04 Poles 60Hz 414608964/0 MEC A

UNCONTROLLED COPY
RELEASED
ZME A3

Propriedade da WEG. Proibida reprodução sem autorização prévia. / WEG's property. Forbidden reproduction without previous authorization.