No reproduction of this drawing is allowed written permission of WEG Motores

EIXO	
PADRÃO	X
OPCIONAL	
ESPECIAL	

Dimensões em polegadas
Dimensions in inches

CERTIFIED WEG MOTORES
Certified document.
Not subject to changes.

THIS IS AN UPDATED REVISION, THE PREVIOUS ONE MUST BE DISREGARDED.

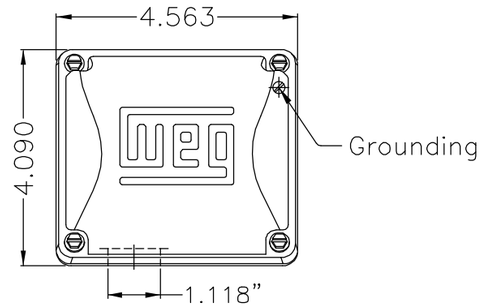

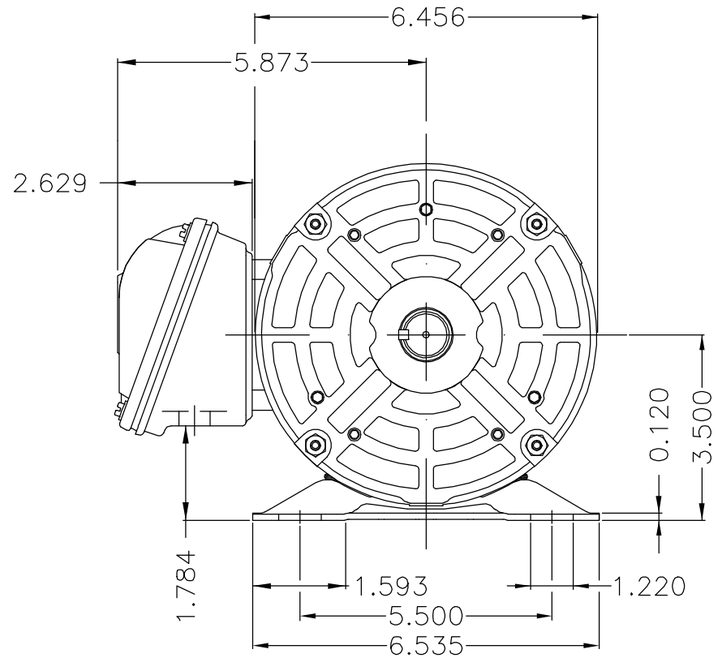

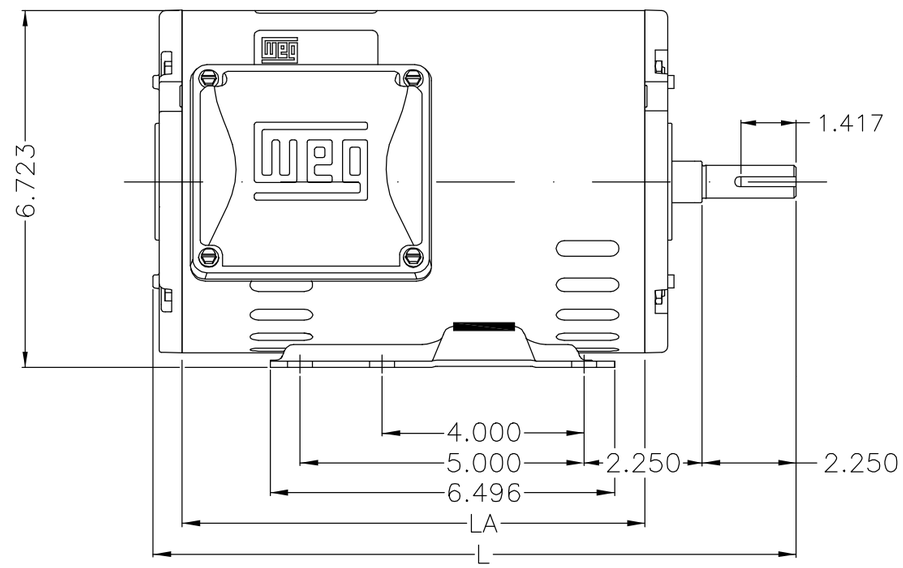

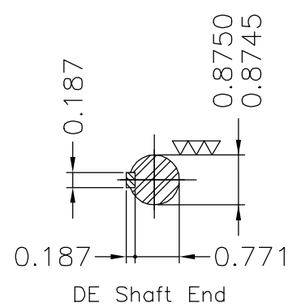

Reforçar o pé com 2 pontos de solda mig / Supplied with reinforced weld on foot
Plano de pintura 207N / Painting plan 207N
Forma construtiva B3D / Mounting B3R(D)

WEG ELECTRIC CORP.

ECM	LOC	SUMMARY OF MODIFICATIONS	EXECUTED	CHECKED	RELEASED	DATE	VER
500001355979		ALTERADO CONFORME ECM	ARIVABENE		MENSOR	11.09.2017	02
500000879750		ATUALIZADO FORMA CONSTRUTIVA	ODORIZZI		DALTONR	14.04.2014	01

2 HP	04 Poles	60Hz	413290214	7.874	11.575	C
1.5 HP	04 Poles	60Hz	413290213	8.661	12.362	B
1 HP	04 Poles	60Hz	413290212	7.480	11.181	A

EXECUTED	EDUARDOC1	THREE PHASE ODP ROLLED STEEL NEMA PREM.	10002657523
CHECKED		FRAME 143/5T IP21 (ODP)	000 / 02
RELEASED	JTOGNERI	COMPRESSOR DUTY	
REL DT	15.01.2014	WMO LINHARES ENGENHARIA DE PRODUTO	SHEET 1 / 1

UNCONTROLLED COPY
RELEASED
ZME A3

WEG's property. Forbidden reproduction without previous authorization.