No reproduction of this drawing is allowed written permission of WEG Motores

EIXO		
PADRÃO		Dimensões em polegadas
OPCIONAL		Dimensions in inches
ESPECIAL	X	

CERTIFIED
WEG MOTORES
Certified document.
Not subject to changes.

THIS IS AN UPDATED REVISION, THE PREVIOUS ONE MUST BE DISREGARDED.

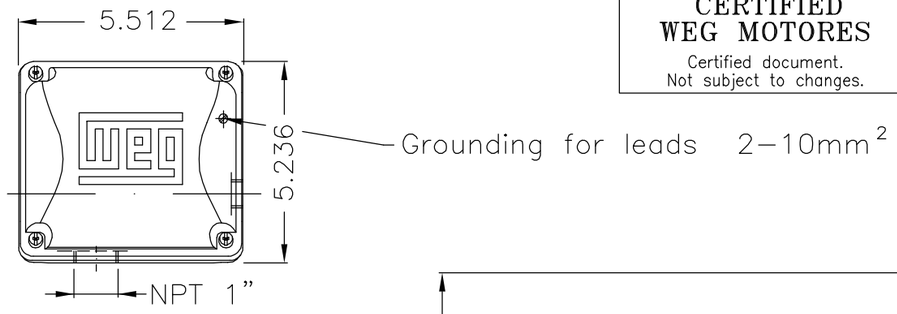

Main terminal box

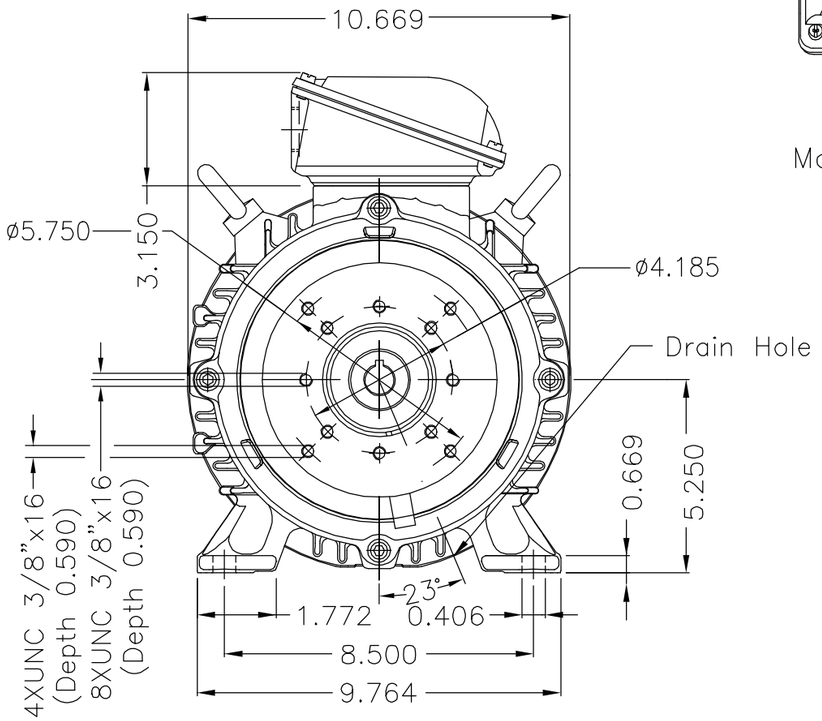

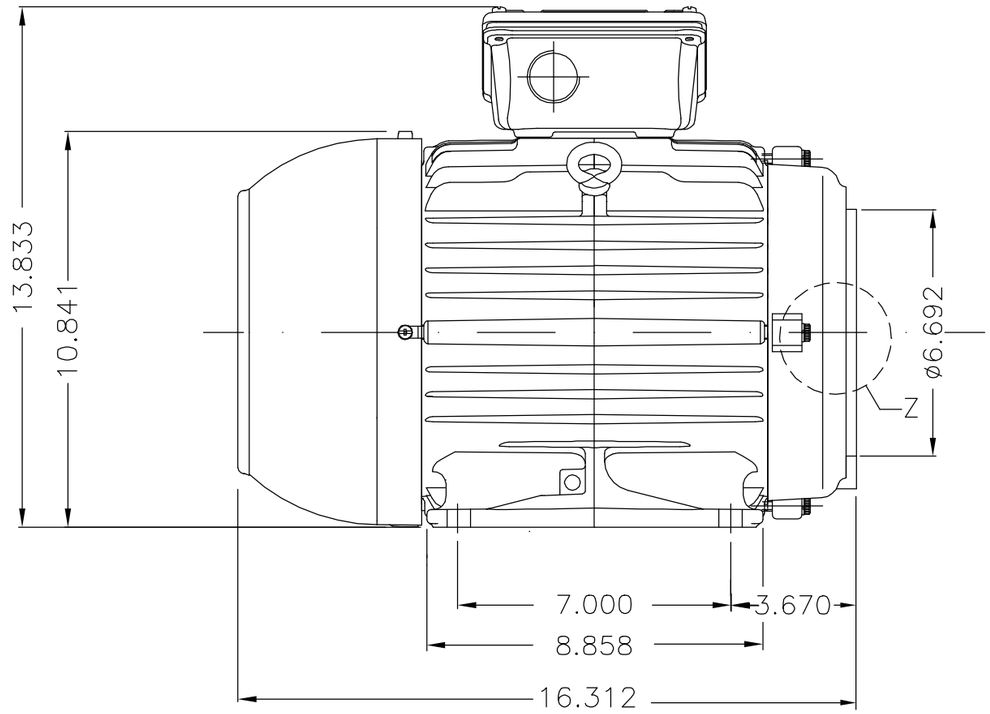

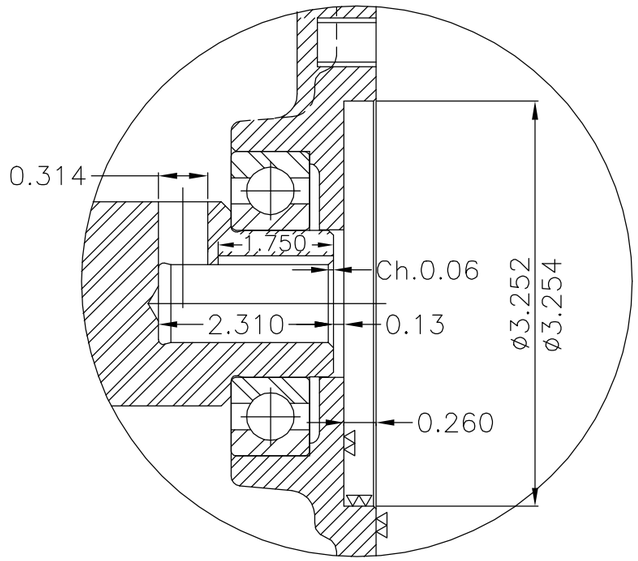

DETAIL Z

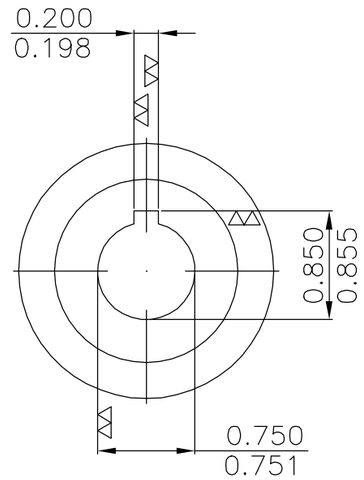

Sem vedação no mancal dianteiro / DE endshield without sealing
Vedação no mancal traseiro – V'ring / NDE sealing – V ring
Tampa flangeada especial / Special flange
Plano de pintura 207A / Painting plan 207A
Forma construtiva B34T / Mounting B34T

WEG ELECTRIC CORPORATION – WEC

ECM	LOC	SUMMARY OF MODIFICATIONS	EXECUTED	CHECKED	RELEASED	DATE	VER
500001229270		ALT. CONFORME CLAIM 414433016	FRANCINES		CLEBERP	04.10.2016	08
500001027028		REMOVIDO REPRESENTAÇÃO ATERR	ANDREPEREIRA		RICARDOAN	16.05.2015	07

EXECUTED	SCARMAGNANI	THREE PHASE W22 MOTOR - HIGH EFF	10001165903
CHECKED		FRAME 215TYZ IP55	000 08
RELEASED	DANIELF		
REL DT	11.03.2011	WMO JARAGUÁ DO SUL ENGENHARIA DE PRODUTO	SHEET 1 / 1

10 HP 04 Poles 60Hz 409982772/0 MEC A

UNCONTROLLED COPY
RELEASED
ZME A3

WEG's property. Forbidden reproduction without previous authorization.