EIXO/SHAFT	
PADRÃO/STANDARD	X
OPCIONAL/OPTIONAL	
ESPECIAL/SPECIAL	

Dimensões em mm
Dimensions in mm

CERTIFIED
WEG MOTORES
Certified document.
Not subject to changes.

THIS IS AN UPDATED REVISION, THE PREVIOUS ONE MUST BE DISREGARDED.

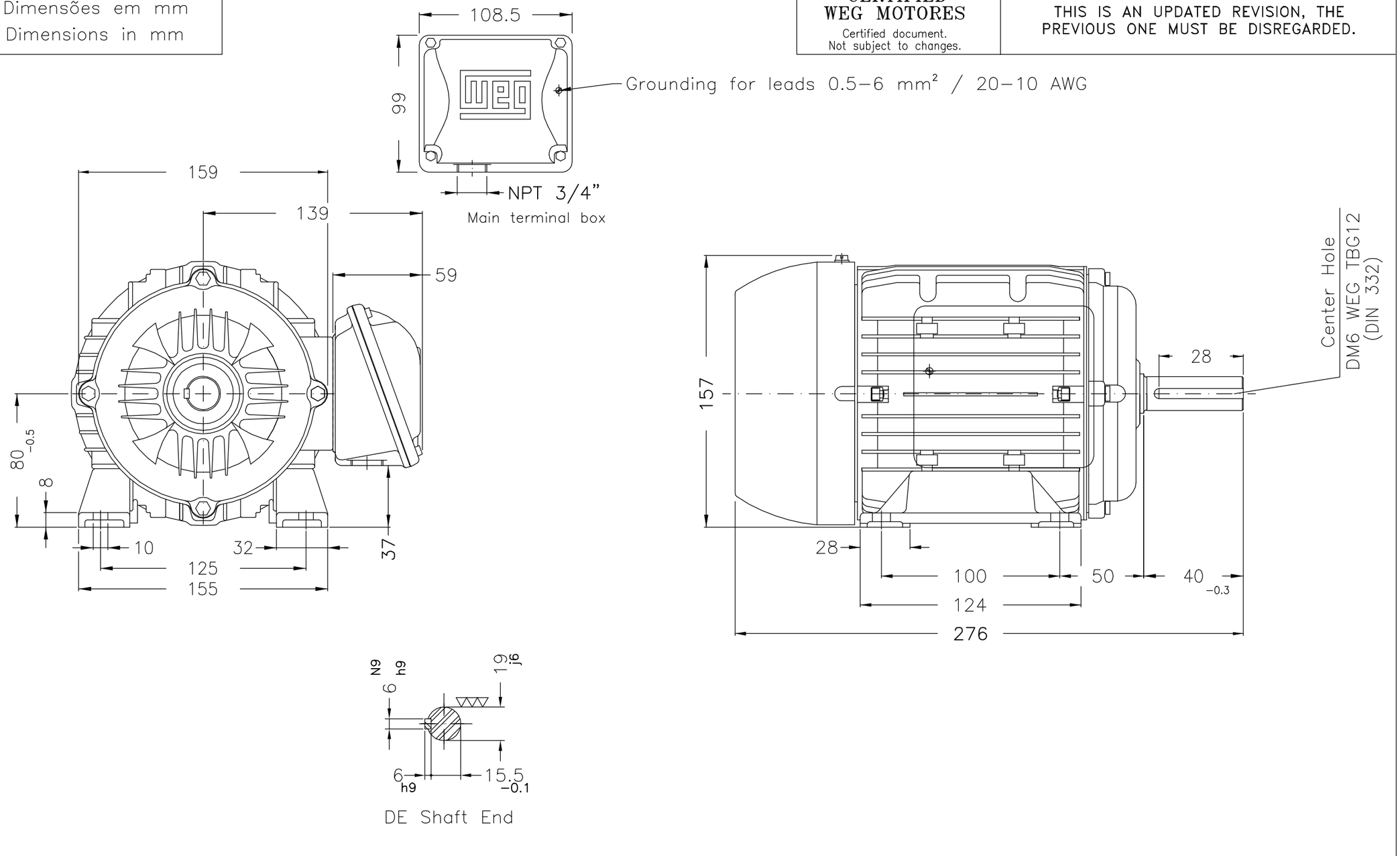

Caixa de ligação W22 / W22 terminal box
Cor RAL 7022 / Color RAL 7022
Plano de pintura 207A / Painting plan 207A
Forma construtiva B3E / Mounting B3L(E)

WEG ELECTRIC CORPORATION - WEC

ECM	LOC	SUMMARY OF MODIFICATIONS	EXECUTED	CHECKED	RELEASED	DATE	VER
500001324595		ALT.CONFORME CLAIM 414692969	PKREYSSIG		MENSOR	21.06.2017	01
500001291622		DOCUMENTO NOVO	DVEGINI		NSCHMIDT	28.03.2017	00

EXECUTED	DVEGINI	THREE PH.MULTI M. H.EFF.MOTOR TRU METRIC FRAME 80 IP55 TEFC	10004852065
CHECKED			000 / 01
RELEASED	NSCHMIDT		
REL DT	28.03.2017	WMO Jaragua do Sul Product Engineering	SHEET 1 / 1

0.5 HP 06 Poles 60Hz 414609512/0 MEC A

UNCONTROLLED COPY
RELEASED
ZME A3

WEG's property. Forbidden reproduction without previous authorization.