EIXO/SHAFT	
PADRÃO/STANDARD	X
OPCIONAL/OPTIONAL	
ESPECIAL/SPECIAL	

Dimensões em polegadas
Dimensions in inches

THIS IS AN UPDATED REVISION, THE PREVIOUS ONE MUST BE DISREGARDED.

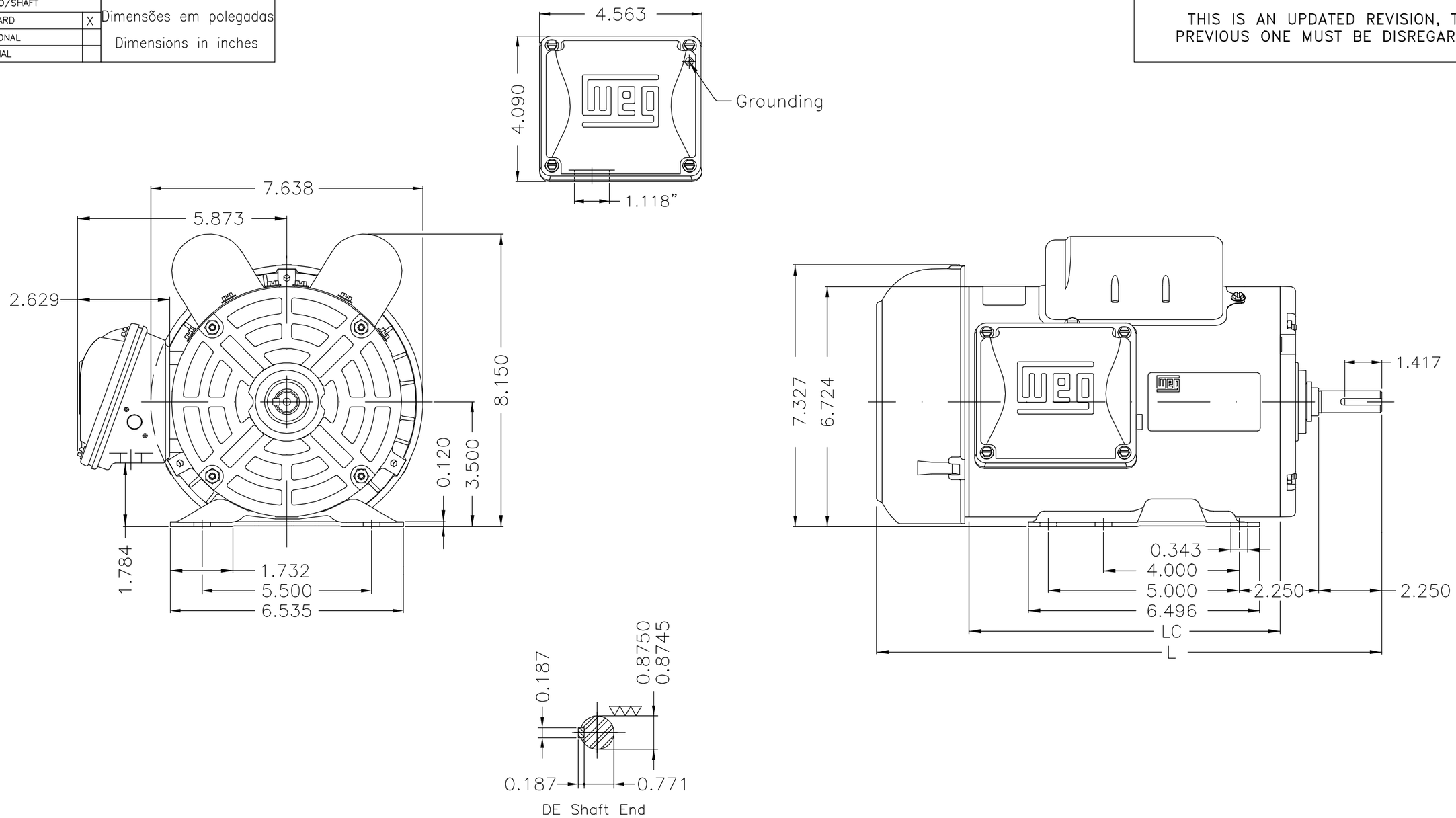

Rolamentos dianteiro e traseiro de esferas 2RS / 2RS DE and NDE ball bearings
Cor RAL 3003 / Color RAL 3003
Protetor térmico fenólico – manual / Phenolic thermal protector – manual
Forma construtiva B3D / Mounting F-1/B3R(D)

WEG ELECTRIC CORPORATION - WEC

ECM	LOC	SUMMARY OF MODIFICATIONS	EXECUTED	CHECKED	RELEASED	DATE	VER
500001355979		Alterado conforme ECM	DEYKSON		MENSOR	11.09.2017	02
500001293870		Alterado COR	DEYKSON		LUISS	10.04.2017	01

EXECUTED	LUCASSZ	SINGLE PHASE MOTOR TEFC ROLLED STEEL FRAME 143/5T IP55 TEFC		10004616171	
CHECKED				000	02
RELEASED	EMERSONRH				
REL DT	21.11.2016	WMO	LINHARES	ENGENHARIA DE PRODUTO	SHEET 1 / 1

				LC	L	
2.0 HP	04 Poles	60Hz	414471322	10.236	15.945	B
1.5 HP	04 Poles	60Hz	414471255	9.448	15.152	A

UNCONTROLLED COPY
RELEASED
ZME A3

WEG's property. Forbidden reproduction without previous authorization.