Dimensões em mm
Dimensions in mm

THIS IS AN UPDATED REVISION, THE PREVIOUS ONE MUST BE DISREGARDED.

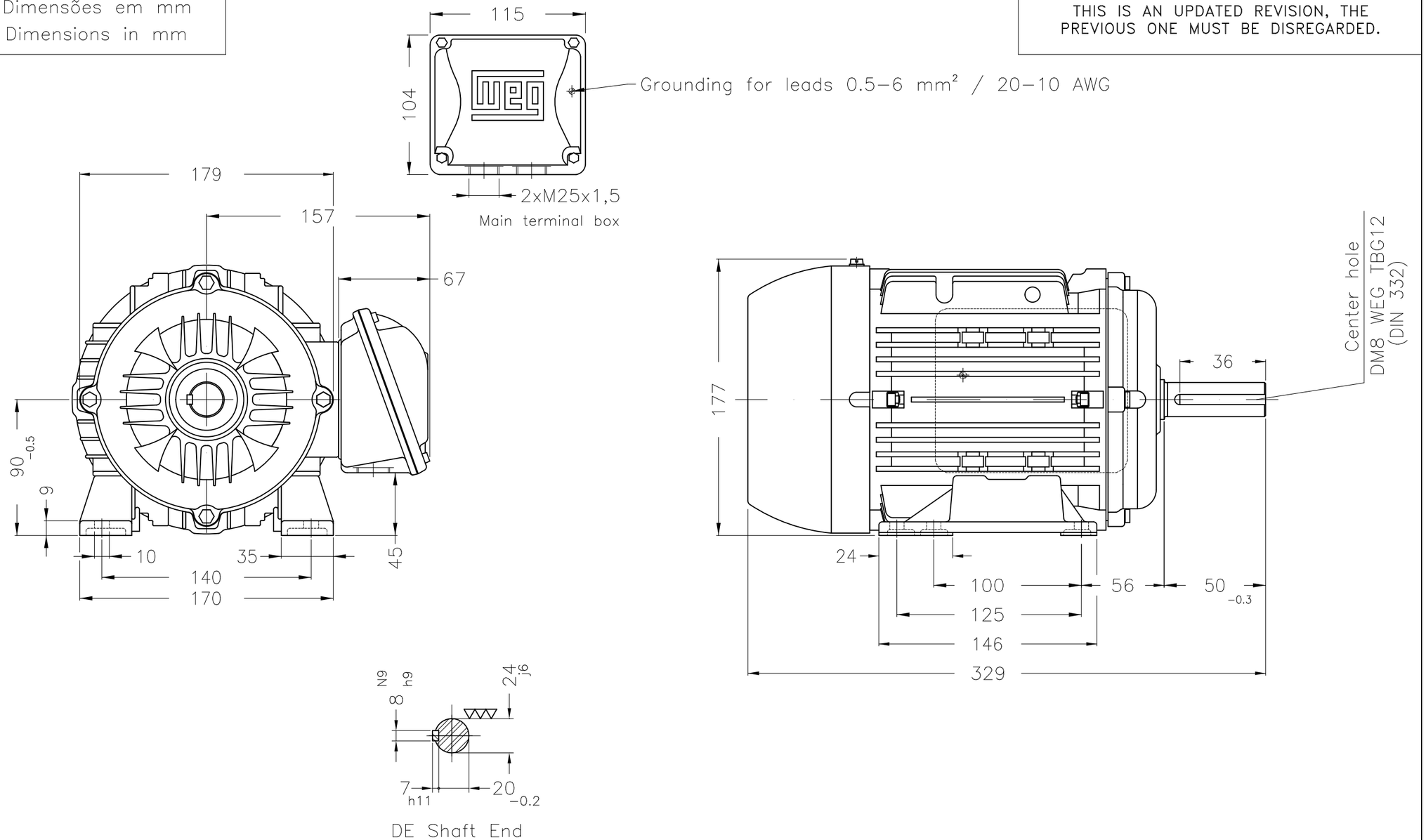

Connection cables connected in the high voltage
Color RAL 5009
Painting plan 207A
Mounting B3L(E)

ECM	LOC	SUMMARY OF MODIFICATIONS	EXECUTED	CHECKED	RELEASED	DATE	VER

EXECUTED	USERADMIN	THREE PHASE MOTOR TRU-METRIC P. EFF AL		
CHECKED		FRAME 90S/L IP55 TEFC		
RELEASED		WEG code: 13984004		
REL DT	22.01.2018	WMO	Jaragua do Sul	Product Engineering	SHEET 1 / 1

1.5 HP 04 Poles 60Hz

A

ZME A3

WEG's property. Forbidden reproduction without previous authorization.