EIXO/SHAFT	
PADRÃO/STANDARD	
OPCIONAL/OPTIONAL	
ESPECIAL/SPECIAL	X

Dimensões em polegada
Dimensions in inches

CERTIFIED WEG MOTORES
Certified document.
Not subject to changes.

THIS IS AN UPDATED REVISION, THE PREVIOUS ONE MUST BE DISREGARDED.

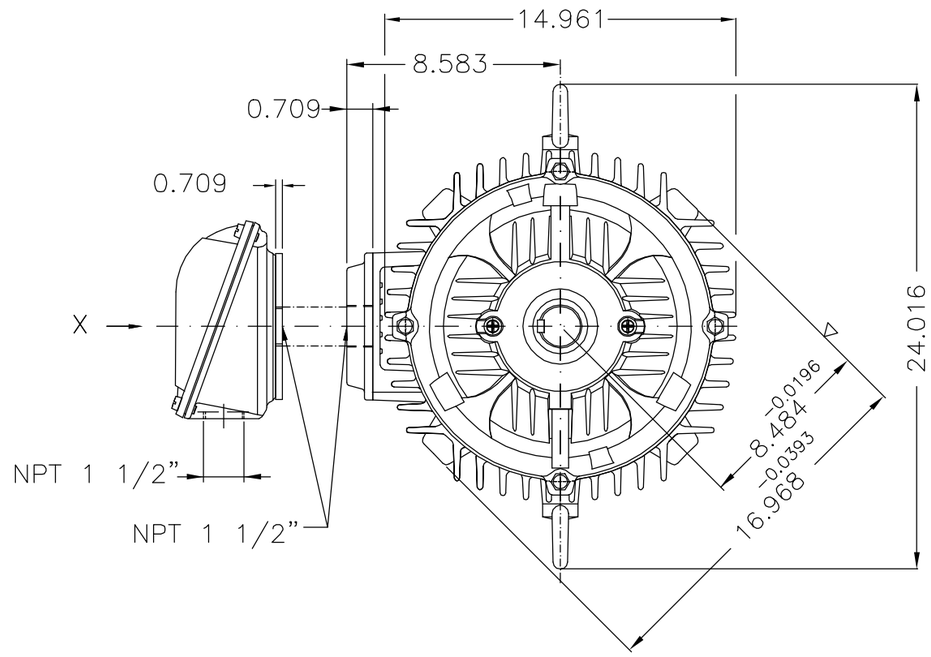

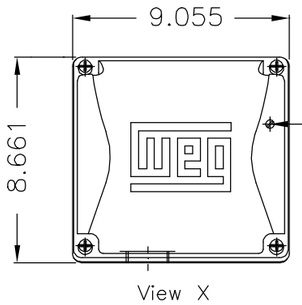

Grounding for leads 5.2–35 mm² / 10–2 AWG

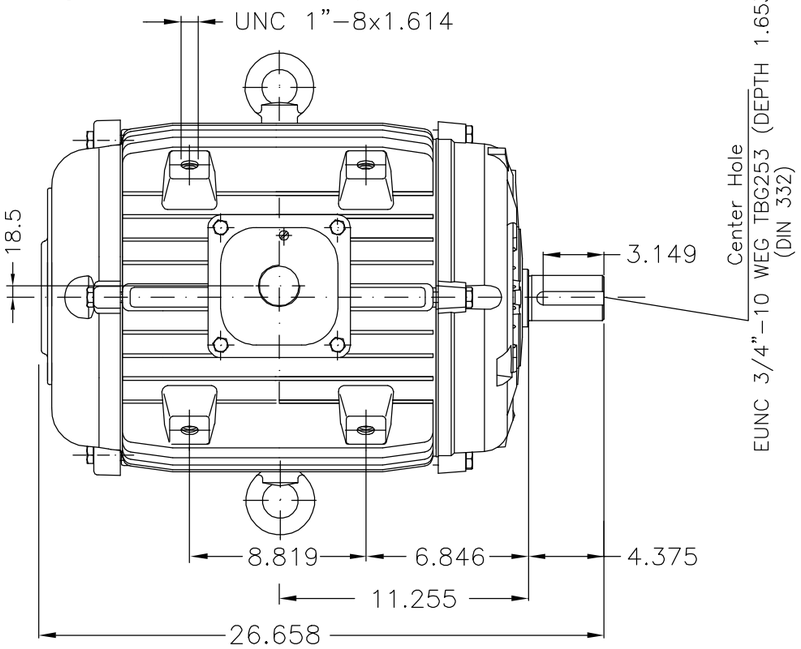

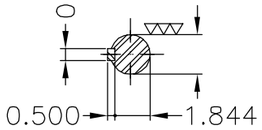

DE Shaft End

30 HP	06 Poles	60Hz		D
25 HP	06 Poles	60Hz		C
50 HP	04 Poles	60Hz		B
40 HP	04 Poles	60Hz	414320731/0 MEC	A

Placa de identificação extra fixada no olhal e com o mesmo número de série
Extra nameplate wired to lifting eye and with the same serial number

Comprimento dos cabos de ligação 1000+50mm a partir da base
Connection leads 1000+50mm length from base

Placa de identificação especial / Special nameplate

Sem tampa defletora / Without fan cover

Caixa de ligação (NPT1 1/2") fornecida em avulso na mesma embalagem
Terminal box (NPT1 1/2") supplied loose on the same motor packing

Ilhó na passagem dos cabos / Rubber ring at the leads exit on frame

Comprimento dos cabos de acessórios 1000+50mm a partir da base
Accessories cables length 1000+50mm from the base

Sem ventilador / Without fan

Proteção térmica desligamento – termistor 155°C / Thermistors 155°C To trip

Capa plástica de proteção dos cabos de ligação do motor
Extended leads to be packed inside plastic bag

Comprimento do cabo de aterramento 1000+50mm a partir da base
Grounding lead 1000+50mm length from base

Cor RAL 5009 / Color RAL 5009

Plano de pintura 203A / Painting plan 203A

Forma construtiva NEMA F–1 / Mounting NEMA F–1

Forma construtiva B30D / Mounting B30R(D)

WEG ELECTRIC CORPORATION - WEC

ECM	LOC	SUMMARY OF MODIFICATIONS	EXECUTED	CHECKED	RELEASED	DATE	VER
500001235129		ALT CONFORME CLAIM 414450636	GEVERSON		FRANCINES	20.10.2016	03
500001205509		ALT. CONFORME CLAIM 414365288	FRANCINES		CLEBERP	01.08.2016	02

EXECUTED	DVEGINI	THREE PHASE W22 MOTOR - NEMA PREMIUM EFF	10004346452
CHECKED		FRAME 326YZ IP55 TEAO	000 / 03
RELEASED	NSCHMIDT		
REL DT	21.06.2016	WMO Jaragua do Sul Product Engineering	SHEET 1 / 1

UNCONTROLLED COPY

RELEASED

ZME A3

WEG's property. Forbidden reproduction without previous authorization.