No reproduction of this drawing is allowed written permission of WEG Motores

EIXO		
PADRÃO	X	Dimensões em polegada
OPCIONAL		
ESPECIAL		

CERTIFIED WEG MOTORES
Certified document. Not subject to changes.

THIS IS AN UPDATED REVISION, THE PREVIOUS ONE MUST BE DISREGARDED.

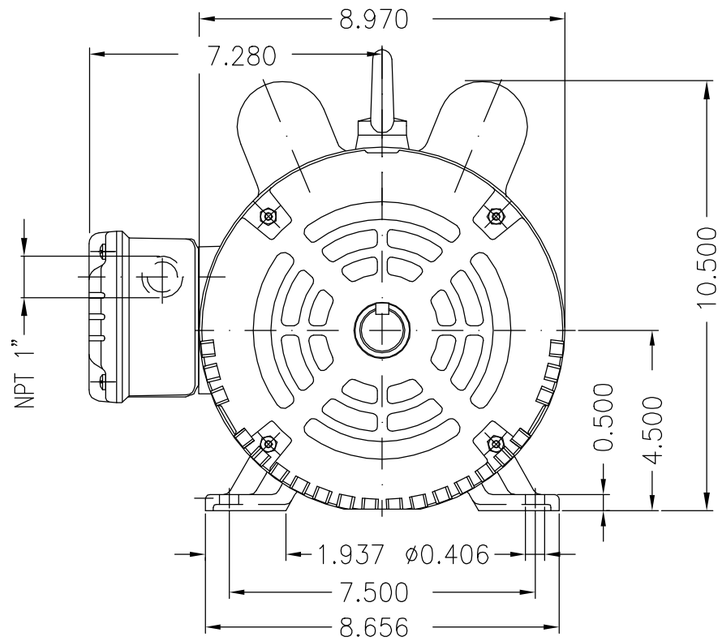

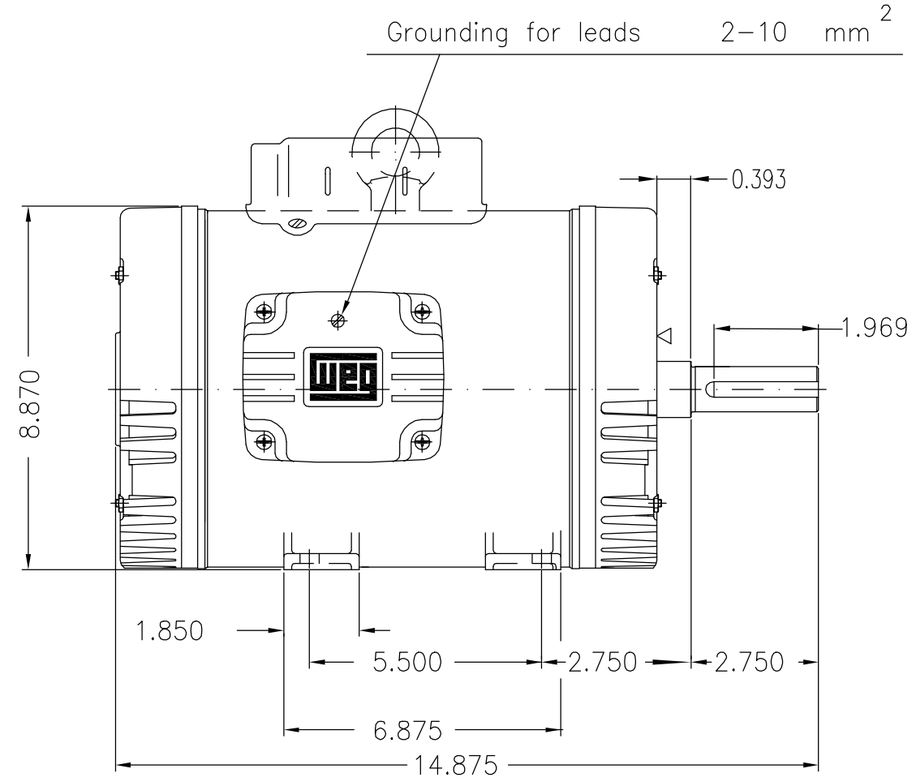

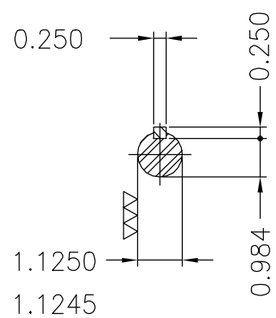

Tampa dianteira especial / Special DE endshield
Capacitor de partida tipo 2 (12535959) / Start capacitor type 2 (12535959)
Sentido de rotação ambos / Rotation CW and CCW
Ventilador de Nylon / Nylon fan
Isolamento Classe F (Dt=80K) / Class F insulation – 80K temperature rise
Fator de serviço 1.25 / Service factor 1.25
Forma construtiva B3D / Mounting B3R(D)

WEG ELECTRIC

ECM	LOC	SUMMARY OF MODIFICATIONS	EXECUTED	CHECKED	RELEASED	DATE	VER
500001037681		INS. NOTA VENTILADOR NYLON	ODORIZZI		RICARDOAN	18.05.2015	09
500000785279		INSERIDO NOTA CAPACITOR TIPO 2	ODORIZZI		AMORIM	16.08.2013	08

EXECUTED	ADRIANAP	SINGLE PHASE MOTOR	E4012738
CHECKED		FRAME 184T IP22	000 09
RELEASED	ADRIANAP	COMPRESSOR	
REL DT	22.08.2008	WMO JARAGUA DO SUL ENGENHARIA DE PRODUTO	SHEET 01 / 01

5 HP 4 POLE 60 Hz CRM11857

A

UNCONTROLLED COPY

RELEASED

ZME A3

WEG's property. Forbidden reproduction without previous authorization.