ON-OFF FLOAT CONTROL VALVE (6” and Larger)

02/09

MUSTANG SERIES

M110-14 (Globe)
M1110-14 (Angle)

Schematics

- Opens when float reaches low level stop
- Closes when float reaches high level stop
- Adjustable Opening and Closing Speed
- Low and High Level stop collars are adjustable

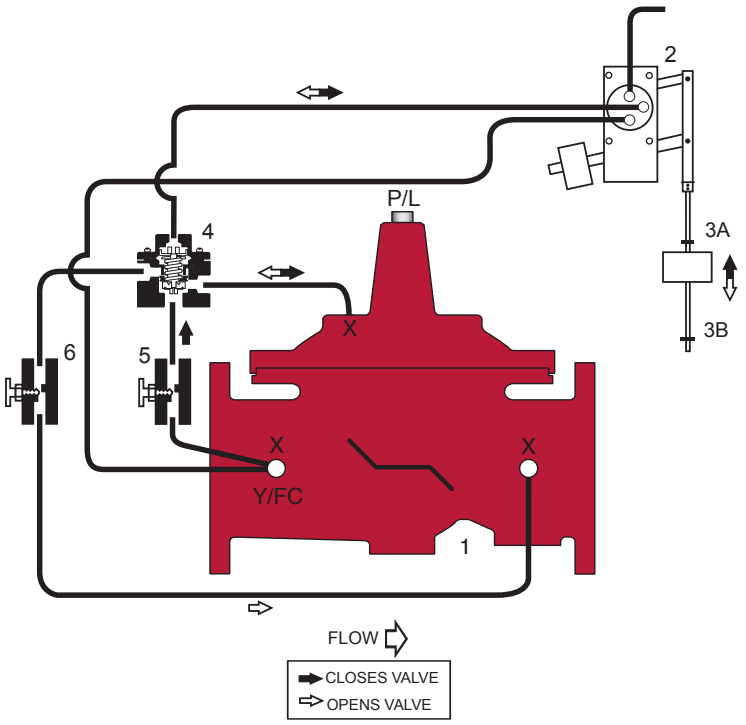

Standard Components

1 – Main Valve (Single Chamber)
2 – On-Off Float Control
3A – High Level Adjustment Stop
3B – Low Level Adjustment Stop
4 – Model 22-1 Accelerator Control
5 – Adjustable Closing Speed
6 – Adjustable Opening Speed

Options & Accessories

○ X – Isolation Cocks *(2)*
○ FC – Flo-Clean Strainer *(1)*
○ Y – Y-Strainer (Replaces Flo-Clean) *(2)*
○ P – Position Indicator *(3)*
○ L – Limit Switch *(3)*

(1) Standard 3” & Smaller
(2) Standard 4” & Larger
(3) Optional All Sizes

Operations

The On-Off Float Control Valve is designed to open fully or close drip-tight as commanded by the Float Control Pilot. The Float Pilot may be either valve or remote mounted. The valve closes drip tight when water level reaches the adjustable high-level setpoint, and opens fully when water level is below the adjustable low-level setpoint, allowing a calculated “draw-down” of water level to increase tank circulation.

The On-Off Float Pilot directs upstream pressure into and out of the cover chamber of the 3-way Accelerator Pilot. When the cover of the Accelerator Pilot is pressurized, the main valve cover chamber is vented downstream, causing the valve to open fully. When the cover of the Accelerator Pilot is de-pressurized, the main valve cover chamber is connected to upstream pressure, causing the valve to close drip tight. Valve opening and closing speeds are separately adjustable. When water level reaches the adjustable high-level setpoint, the Float Pilot de-pressurizes the cover chamber of the 3-Way Accelerator, closing the valve drip tight. The valve remains closed as water level decreases. When water level reaches the adjustable low-level setpoint, the Float Pilot pressurizes the cover chamber of the 3-Way Accelerator, opening the valve fully. High and low levels are separately adjustable by positioning stop collars on the float rod(s) at desired opening and closing setpoints.

If desired, the on-off action of the valve can be “reversed” by modifying the hydraulic connections of the On-Off Float Pilot.

Materials

Body & Cover:	Ductile Iron ASTM A536
Coating:	NSF Listed Fusion Bonded Epoxy Lined and Coated
Trim:	316 Stainless Steel
Elastomers:	Buna-N (standard) EPDM Viton
Stem, Nut & Spring:	Stainless Steel

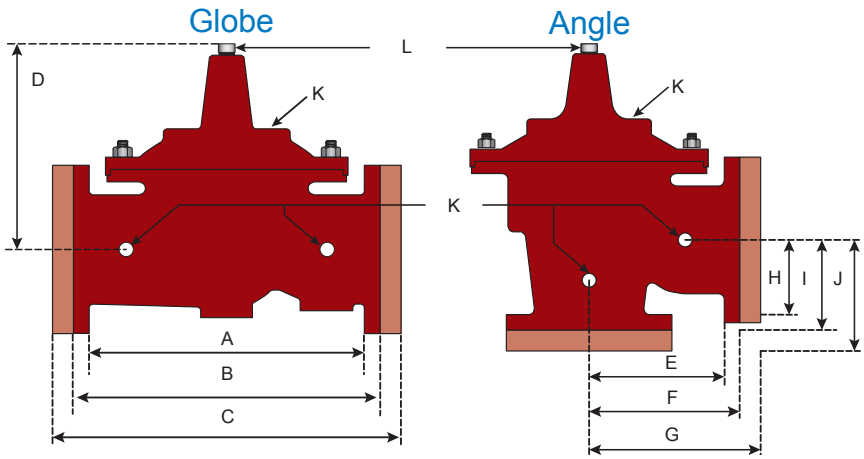

Operating Pressure

Threaded = 400 psi
150 Flanged = 250 psi
300 Flanged = 400 psi

Operating Temperature

Buna-N: 160°F Maximum
EPDM: 300°F Maximum
Viton: 250°F Maximum

Pilot System

Float Control
Brass (Standard)
Float Ball
Polyethylene (5" dia.)
Float Rods
(4) 12" Rods (Standard)

Tubing & Fittings

Copper / Brass (Standard)
Stainless Steel (Optional)

Dimensions

	A	B	C	D	E	F	G	H	I	J	K	L	
VALVE SIZE	GLOBE THRD.	GLOBE 150#	GLOBE 300#	COVER TO CENTER	ANGLE THRD.	ANGLE 150#	ANGLE 300#	ANGLE THRD.	ANGLE 150#	ANGLE 300#	PORT SIZE	PORT SIZE	SHIPPING WEIGHTS*
1-1/4	7-1/4	-	-	5-1/2	3-1/4	-	-	1-7/8	-	-	3/8	1/4	20
1-1/2	7-1/4	8-1/2	9	5-1/2	3-1/4	4	4-1/4	1-7/8	4	4-1/4	3/8	1/4	25
2	9-3/8	9-3/8	10	6-1/2	4-3/4	4-3/4	5	3-1/4	3-1/4	3-1/2	3/8	1/2	40
2-1/2	11	11	11-5/8	7-1/2	5-1/2	5-1/2	5-7/8	4	4	4-5/16	1/2	1/2	65
3	12-1/2	12	13-1/4	8-1/4	6-1/4	6	6-3/8	4-1/2	4	4-3/8	1/2	1/2	95
4	-	15	15-5/8	10-5/8	-	7-1/2	7-7/8	-	5	5-5/16	3/4	3/4	190
6	-	20	21	13-3/8	-	10	10-1/2	-	6z	6-1/2	3/4	3/4	320
8	-	25-3/8	26-3/8	16	-	12-3/4	13-1/4	-	8	8-1/2	1	1	650
10	-	29-3/4	31-1/8	17-1/8	-	14-7/8	15-9/16	-	8-5/8	9-5/16	1	1	940

For larger sizes consult factory

Valve Cover Chamber Capacity

Valve Size (in)	1-1/4	1-1/2	2	2-1/2	3	4	6	8	10
fl.oz.	4	4	4	10	10	22	70	-	-
U.S. Gal	-	-	-	-	-	-	-	1-1/4	2-1/2

Valve Travel

Valve Size (in)	1-1/4	1-1/2	2	2-1/2	3	4	6	8	10
Travel (in)	3/8	3/8	1/2	5/8	3/4	1	1-1/2	2	2-1/2

Sizing

Size (in)	1-1/4	1-1/2	2	2-1/2	3	4	6	8	10
Maximum Continuous (GPM)	95	130	210	300	485	800	1850	3100	5000
Maximum Intermittent (GPM)	119	161	265	390	590	1000	2300	4000	6250
CV Factor GPM (Globe)	25	30	45	75	100	175	490	770	1200
CV Factor GPM (Angle)	26	27	57	91	125	215	571	990	1530

Maximum continuous flow based on velocity of 20 ft. per second.
Maximum intermittent flow based on velocity of 25 ft. per second.

NOTE: The above chart is a suggested guide. Inlet pressure, outlet pressure, minumum, normal and maximum flow rates should be considered for specific valve sizing. Contact Watts ACV for details.

Headloss

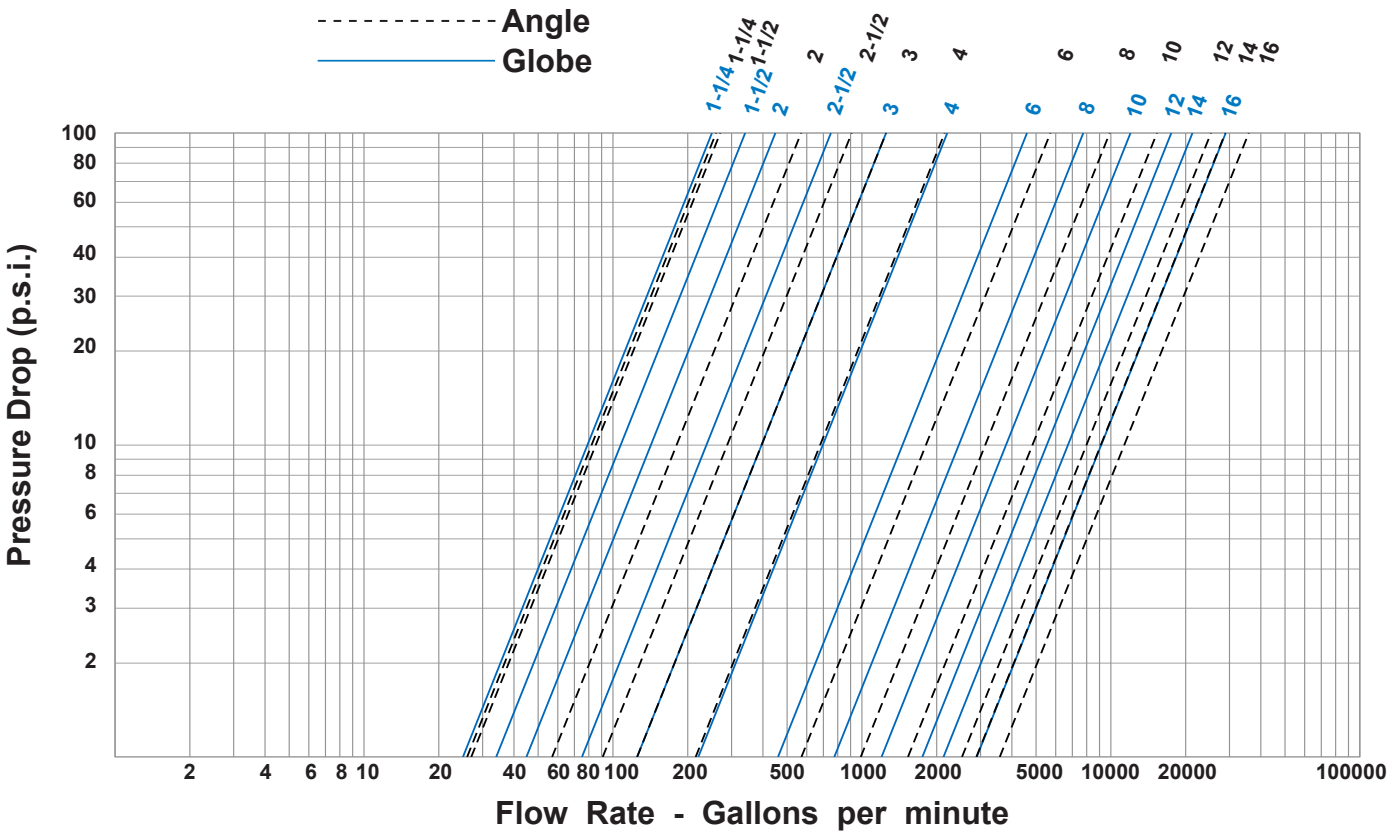

The C_v Factor of a value is the flow rate in US GPM at 60° F that will cause a 1 psi drop in pressure.
The factors stated are based upon a fully open valve.
Cv factor can be used in the following equations to determine Flow (Q) and Pressure Drop (Δ P):

Q (Flow) = $C_v\sqrt{\Delta P}$ Δ P (Pressure Drop) = $(Q/C_V)^2$

Cross-Sectional Detail

Main Valve

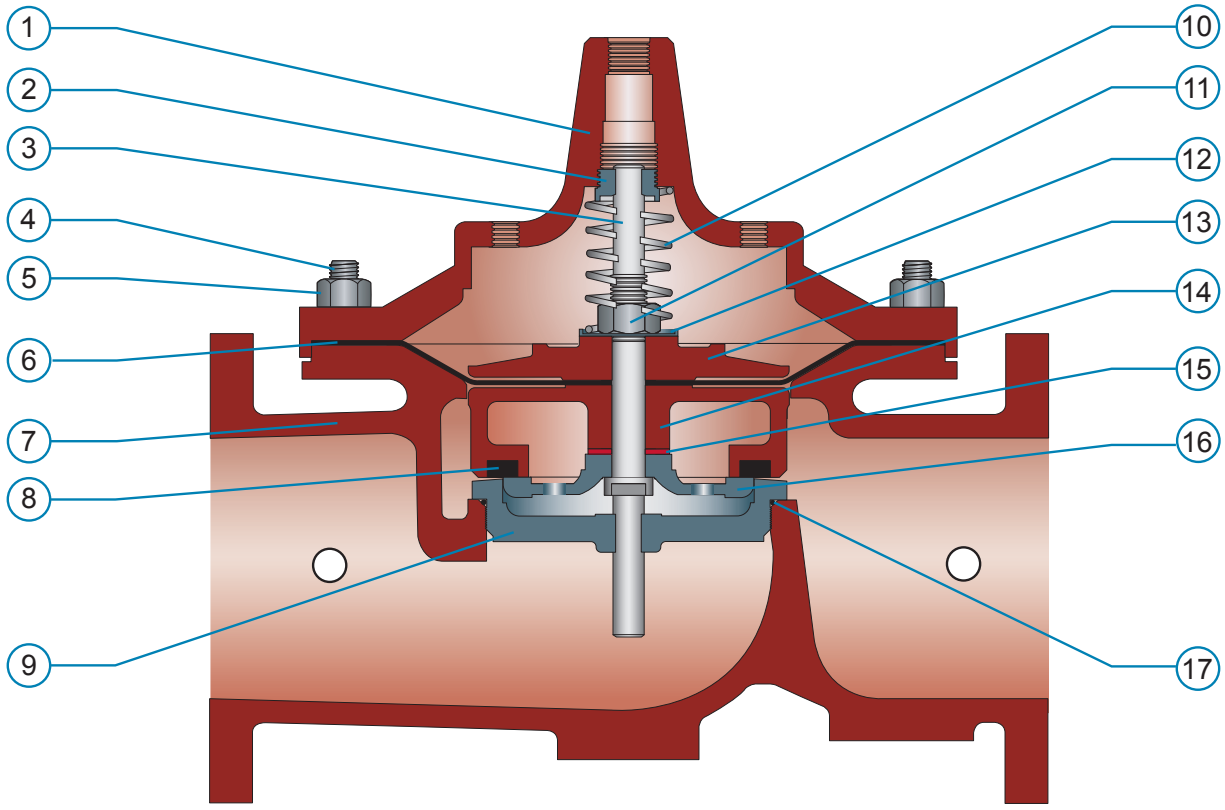

ITEM	DESCRIPTION	MATERIAL
1	Cover	ASTM A536 65-45-12 Epoxy Coated Ductile Iron
2	Cover Bearing	ASTM A276 304 Stainless Steel
3	Shaft / Stem	ASTM A276 304 Stainless Steel
4	Stud	ASTM A570 Gr.33 Zinc Plated Steel
5	Cover Nut	ASTM A570 Gr.33 Zinc Plated Steel
6	Diaphragm*	Buna-N (Nitrile)
7	Body	ASTM A536 65-45-12 Epoxy Coated Ductile Iron
8	Seat Disc*	Buna-N (Nitrile)
9	Seat Ring	ASTM A743 CF8M (316) Stainless Steel
10	Spring	ASTM A276 302 Stainless Steel
11	Stem Nut	ASTM A276 304 Stainless Steel
12	Spring Washer	ASTM A276 304 Stainless Steel
13	Diaphragm Washer	ASTM A536 65-45-12 Epoxy Coated Ductile Iron
14	Disc Retainer	ASTM A536 65-45-12 Epoxy Coated Ductile Iron
15	Spacer Washer*	Fiber*
16	Disc Guide	ASTM A743 CF8M (316) Stainless Steel
17	Seat Gasket*	Buna-N (Nitrile)

** Contained in Main Valve Repair Kit*

Installations

- Prior to installation, flush line to remove debris.
- Install valve horizontally “in line” (cover facing UP), so flow arrow matches flow through the line. **Avoid installing valves 6” and larger vertically.** Consult factory **prior** to ordering if installation is other than described.
- Install inlet and outlet isolation valves. **NOTE:** When using butterfly valves, insure disc does not contact control valve. Damage or improper valve seating may occur.
- Provide adequate clearance for valve servicing and maintenance.
- Install pressure gauge to monitor valve inlet pressure.
- If On-Off Float Pilot is remotely mounted it should be field connected with 3/8” minimum copper tubing in accordance with factory piping schematic.
- Float Pilot, Rods, and Ball should be mounted in a field installed “stilling well” for protection against surface turbulence and interference.
- Additional 12” Float Rods available. Consult Factory.

Start-Up

Proper Automatic Control Valve start-up requires bringing the valve into service in a controlled manner. All adjustments to control pilots and speed controls should be made slowly, allowing the valve to respond and the system to stabilize. **NOTE: Control Valves should be set-up in a dynamic (flowing) condition for proper start-up. Provisions for flow must be made to insure proper settings.**

- If Float Control is remote mounted, field installed control lines should be 3/8” minimum copper tubing for distances no greater than 10 feet. For greater distances use 1/2” minimum copper tubing or pipe.

- Remote mount – without Accelerator (4” and smaller):
  Port 1 = Supply Pressure
  Port C = Valve Cover
  Port 2 = Atmosphere

- Remote Mount – with Accelerator (6” and larger):
  Port 1 = Atmosphere
  Port C = Accelerator Cover
  Port 2 = Supply

1. Close upstream and downstream valves to isolate the valve from line pressure. Open all Isolation Ball Valves, if so equipped. If valve is fitted with adjustable speed controls, turn needle(s) in (clockwise) until seated, and return out (counterclockwise) 1-1/2 to 2-1/2 turns. These are approximate settings, and should be fine tuned to suit system requirements after level adjustments have been made.

2. Slowly open upstream isolation valve to allow controlled filling of the valve. Vent entrapped air by carefully loosening control tubing or pipe plug at the highest point possible. If valve is equipped with a Position Indicator, open Air Bleed Petcock to vent air. Water will be milky in appearance and will begin to clear as air is vented. Re-tighten when water vents clearly.

3. **Setting Float Control:** Install desired number of Float Rods and Low and High Level Stop Collars (less Float). Manually position Float Control to the center point in its travel and balance by positioning Counterweight “in” or “out” until Float Control holds in position. Proper balance is achieved when Float Control moves to the “down/on” or “up/off” position with minimal force or drag. The position of Counterweight on the Counterweight Rod will vary based upon the number and material of Float Rods being used. Install Float.

4. Position Low and High Level Stop Collars on Float Rods to match desired valve opening and closing levels. Slowly open downstream isolation valve.

5. Fine tune Speed Controls (if equipped) to suit system requirements. Adjust Closing Speed Control clockwise for slower closure and counterclockwise for faster closure. Adjust Opening Speed Control clockwise for slower opening and counterclockwise for faster opening.

Specifications

The On-Off Float Control Valve shall be a pilot operated diaphragm valve designed to open fully or close drip-tight as commanded by the Float Control Pilot. The Float Pilot may be either valve or remote mounted. The valve shall close drip tight when water level reaches the adjustable high-level setpoint, and open fully when water level is below the adjustable low-level setpoint, allowing a calculated “draw-down” of water level to increase tank circulation.

The main valve shall be a hydraulically operated, single diaphragm actuated, globe or angle pattern valve. Y-pattern valves shall not be permitted. The valve shall contain a disc and diaphragm assembly that forms a sealed chamber below the valve cover, separating operating pressure from line pressure. The diaphragm shall be constructed of nylon reinforced Buna-N, and shall not seal directly against the valve seat and shall be fully supported by the valve body and cover. Rolling diaphragm construction will not be allowed and there shall be no pistons operating the main valve or any pilot controls.

The main valve body and cover shall be Ductile Iron ASTM A536, and all internal cast components shall be Ductile Iron or CF8M (316) Stainless Steel. All Ductile Iron components, including the body and cover, shall be lined and coated with an NSF 61 Certified Epoxy Coating applied by the electrostatic heat fusion process. All main valve trim and throttling components (cover bearing, valve seat and disc guide) shall be Stainless Steel. The valve body and cover must be machined with a 360-degree locating lip to assure proper alignment.

The disc and diaphragm assembly shall contain a Buna-N synthetic rubber disc with a rectangular cross-section that is securely retained on 3-1/2 sides by a disc retainer and disc guide. Diaphragm assemblies utilizing bolts or cap screws for component retention will not be permitted.

The exposed portion of the seat disc shall contact the valve seat and seal drip-tight. The disc and diaphragm assembly must be guided by two separate bearings, one installed in the valve cover and one concentrically located within the valve seat, to avoid deflection and assure positive disc-to-seat contact. Center guided valves will not be permitted. All necessary repairs shall be made from the top of the valve while the body remains in line.

The pilot control system shall contain an On-Off Float Pilot, 3-Way Accelerator Pilot, separate Adjustable Opening and Closing Speed Controls, (4) 12” Float Rods, Float Ball, an external Y-Strainer and Isolation Ball Valves on all body connections. The pilot control system shall utilize copper tubing and brass fittings.

The valve shall be Watts ACV Model M110-14 (Globe) or M1110-14 (Angle) On-Off Float Control Valve.

Other Watts ACV Float Control Valves

M110-14 / M1110-14 On-Off Float Control Valve (4” and Smaller)