VACUFORCE®

VACUUM VALVES

VFDAVV VACUUM VALVES

- Direct acting vacuum valves
- 12VDC, 24VDC, 110VAC & 230VAC
- 1/4 & 1/2 Ports
- Full size high flow orifice
- 3-way Operation
- 2-way Operation (plug exhaust port using VFBP-U02)
- Aluminum body with teflon option

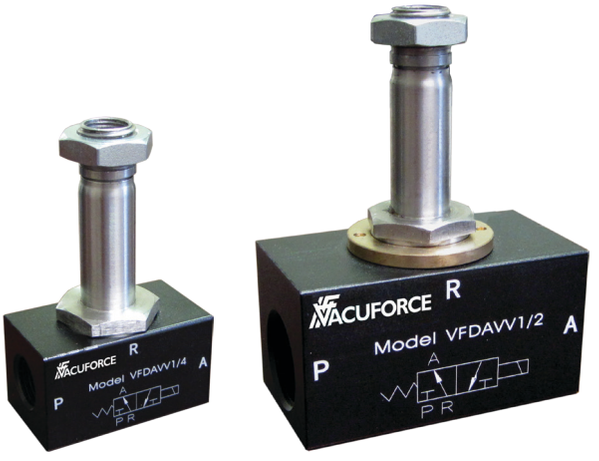

VFDAVV	1/2
Series	Port Size
	1/4
	1/2

This valve series can be used as a 2-way valve if the solenoid stem is plugged with a VFBP-U01 blanking plug.



DIMENSIONS (mm)

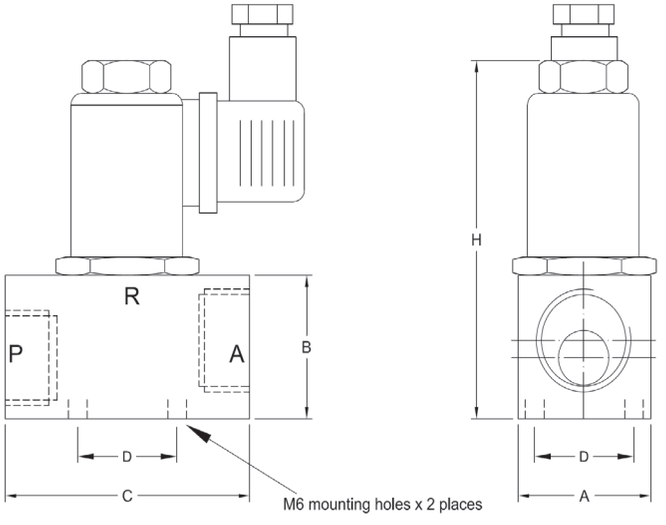



VFDAVV Valve and Coil Assembled

Model	A	B	C	D	H
VFDAVV1/4	25	25	44	16	86
VFDAVV1/2	35	35	65	25	96

ELECTRICAL COILS

The VFDAVV series of valves are supplied without coils which must be ordered separately. Please select from the table below.



Model	Voltage
SB486-12VDC	12VDC
SB486-24VDC	24VDC
SB486-110VAC	110VAC
SB486-230VAC	230VAC

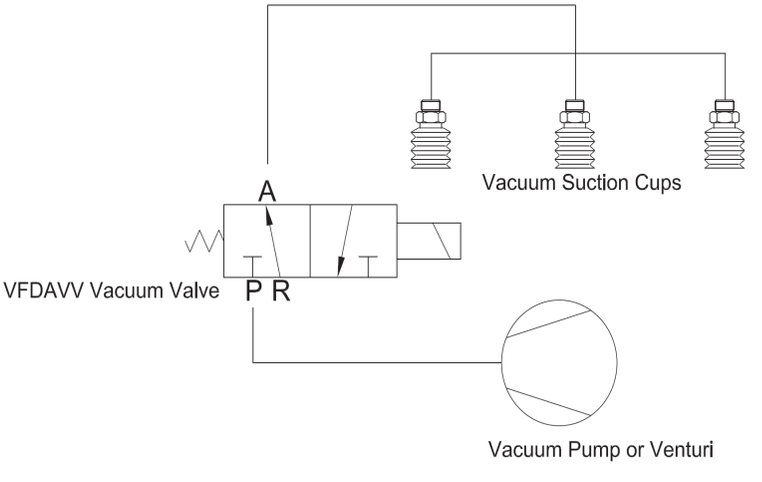

Typical Use of a VFDAVV Valve

JZF VACUUM VALVES

- Pilot Assisted Poppet valves
- 12VDC, 24VDC, 110VAC & 230VAC
- 1/2, 3/4 & 1 Ports
- Full Size Orifice
- 3-way Operation
- Aluminum Construction



3V JZF 15 EP

Type		Series	Port Size		Pilot	
3A	Pilot		15EP	1/2		Internal*
3V	Solenoid		20EP	3/4	EP	External
			25EP	1		

**Internal Pilot only suitable for pressure operation. Vacuum applications require external pilot models (EP).*

The JZF series of vacuum valves have been developed to offer a high vacuum flow control solution when using larger vacuum pumps or generators. With port sizes of either 1/2, 3/4 or 1NPT, these vacuum valves have a very fast reaction time in comparison to actuated ball and gate valves, which are normally used in high flow vacuum applications. The vacuum models require an external pilot. For pressure only operation an internal pilot is sufficient. Manufactured in painted cast aluminum with Nitrile rubber seals and available with special seal materials on request, the JZF series stands alone in its performance and ownership cost.



The 3VJZF series of valves are supplied without coils which must be ordered separately. Please select from the table below.

Model	Voltage
210DIN12VDC	12VDC
210DIN24VDC	24VDC
210DIN110VAC	110VAC
210DIN230VAC	230VAC

	3AJZF-15EP	3AJZF-20EP	3AJZF-25EP	3VJZF-15EP	3VJZF-20EP	3VJZF-25EP
Working Medium	Air					
Operation	Pilot Operated			Solenoid Operated / Pilot Assisted		
Port Size	1/2NPT	3/4NPT	1NPT	1/2NPT	3/4NPT	1NPT
Orifice Size	Ø15mm	Ø25mm		Ø15mm	Ø25mm	
Working Pressure	Vacuum of 0 to -100kPa (0-29.9”Hg) | Pressure of 0-10bar (0-150psi)					
Body Material	Painted Aluminum					
Seal Material	NBR (special seals available on request)					
Operating Temperature	-5ºC to +70ºC (23ºF to 158ºF)					
Service Life	≥5M					
Flow Rate	800l/min (28CFM)	2031l/min (71CFM)		800l/min (28CFM)	2031l/min (71CFM)	
Pilot Port	1/8					

DIMENSIONS (mm)

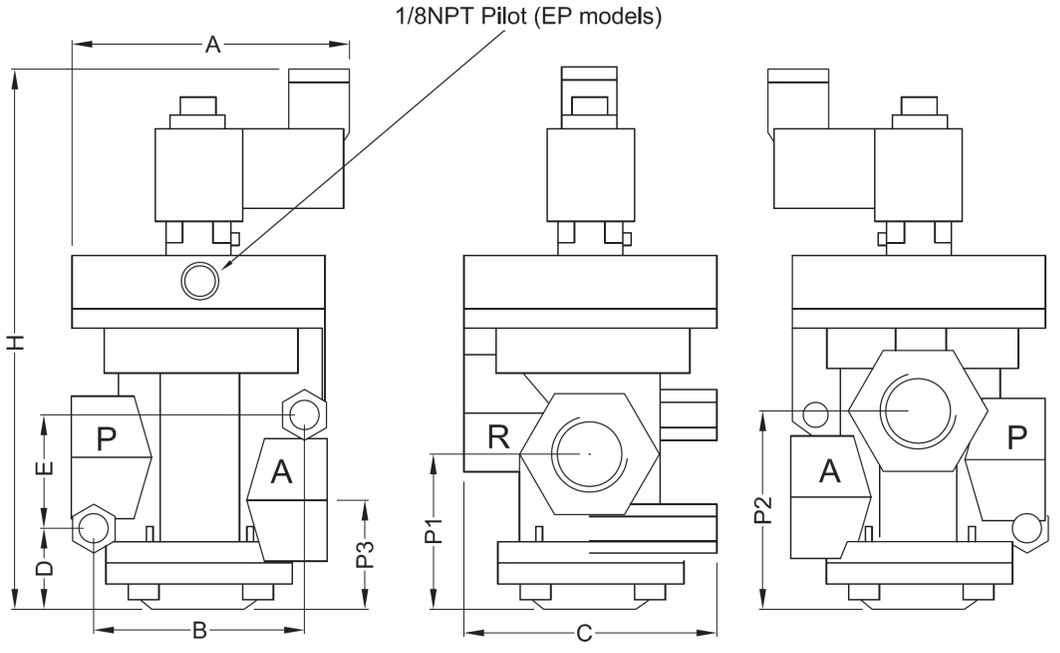

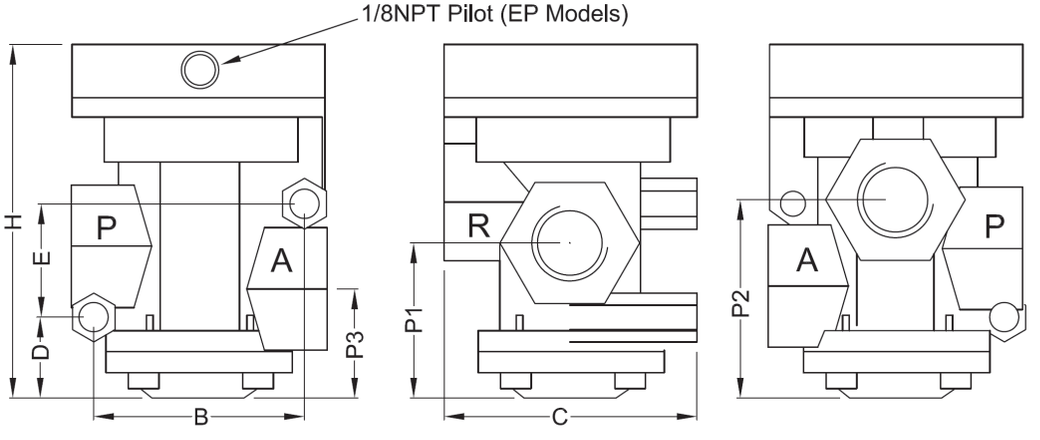

Model	A	B	C	D	E	P1	H	P2	P3
3AJZF-15EP	-	62.5	75	23	32.5	44	101	55	32
3AJZF-20/25EP	-	76	94	20.5	38.5	48	117	62	34
3VJZF-15EP	87	62.5	75	23	32.5	44	164	55	31
3VJZF-20/25EP	96	76	94	20.5	38.5	48	177	62	34

- Hard anodized aluminum body
- Complete vacuum isolation (zero leak)
- Stainless steel spring
- 1/4” Female and 3/8” Male cup connection
- Fully adjustable based on application



VFSC3/8

Part Number

The Vacuforce self closing valve is used on vacuum cup handling systems where multiple cups are utilizing the same vacuum source. The valve is mounted directly onto the vacuum port of the vacuum cup. If that cup is damaged or does not seal against the load being lifted, the induced vacuum air flow closes the valve shut. This ensures that the vacuum level is retained in the rest of the vacuum cups installed on the same circuit. This valve is adjustable and therefore can be used on various size vacuum cups or even on porous surfaces such as cardboard or MDF paneling. The cup mounting can be facilitated using either the G1/4 female or G3/8 male thread. The brass adjustment screw, depending on the cup fitting design, can be adjusted with the vacuum cup installed.

DIMENSIONS (mm)

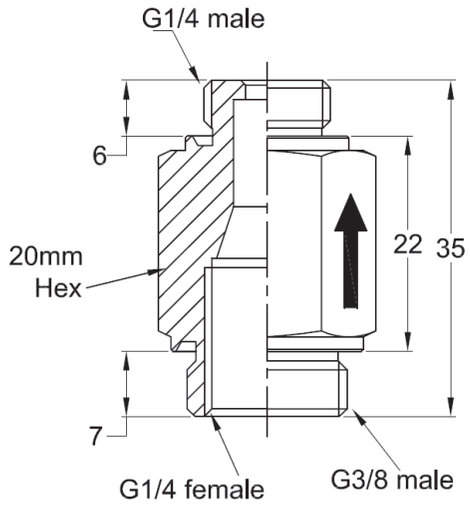

The image on the right shows the simple construction of this valve consisting of:

- Valve Body
- Spring
- Nitrile Sealing Ball
- Brass Adjustment Screw



Adjustment Instructions

The self closing valve works on the principle of air flow volume. The adjustment of this valve is dependent on the volume of air between the valve and the sealing surface of the cup. Therefore this distance should be minimized to ensure accuracy and repeatability. The brass set screw should be turned inwards in a CW direction to decrease the amount of flow that closes the valve and turned outwards in a CCW direction to increase the amount of flow to close the valve.

An approximate guide for use a on a 40mm diameter single bellows cup is 1mm of ball movement. If the cup is larger or sealing on a porous surface, this adjustment might need to be increased.

The illustration on the right shows 5 rows of cups but with Row 5 overhanging the load. The inrush of air will close this row or self closing valves.

