VACUFORCE®

the barracuda® THE SQUID®

BAG AND SACK LIFTING VACUUM TECHNOLOGY





the barracuda®

VFBLLT1224

VACUFORCE®

The barracuda has been developed for applications requiring the vacuum handling of bags and sacks such as grain, sugar, flour, pasta and other products where traditional vacuum cups are unable to maintain grip on an unstable load.

A two part assembly with an EPDM rubber seal ensures reliable and consistent lifting force of 300lbs (136kg) @ -80kPa (24”Hg).

Manufactured from anodized aluminum as standard but available in various other materials as FDA compliant PTFE, to suit the application.





VFBL	1224	
Series	Model	Body Material
		Aluminum
	PTFE	PTFE
	SS	Stainless Steel

SPARE SEALS

VFBL1224SEPDM

Part Number



Dimensions (mm)

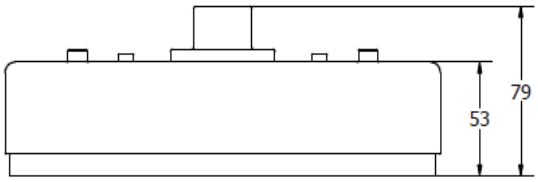

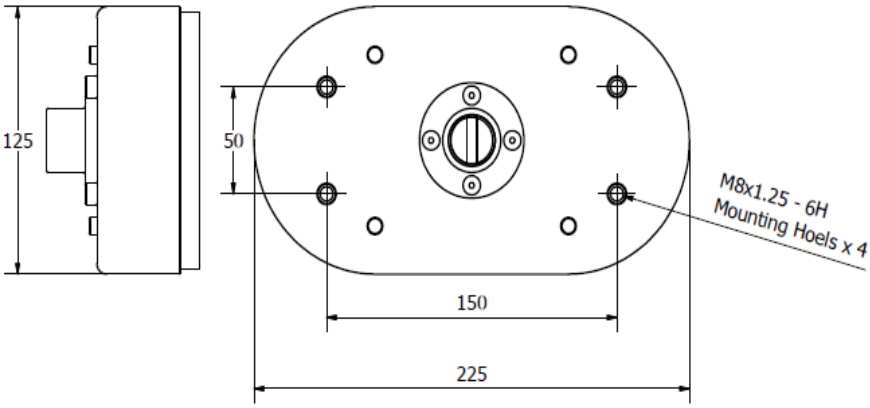

The barracuda has been developed for applications requiring the vacuum handling of bags and sacks such as grain, sugar, flour, pasta and other products where traditional vacuum cups are unable to maintain grip on an unstable load.

A two part assembly with an EPDM rubber seal ensures reliable and consistent lifting force of 240lbs (109kg) @ -80kPa (24”Hg).

Manufactured from anodized aluminum as standard but available in various other materials as FDA compliant PTFE, to suit the application.





VFBL	1217	
Series	Model	Body Material
		Aluminum
PTFE		PTFE
SS		Stainless Steel

SPARE SEALS

VFBL1217SEAL

Part Number



Dimensions (mm)

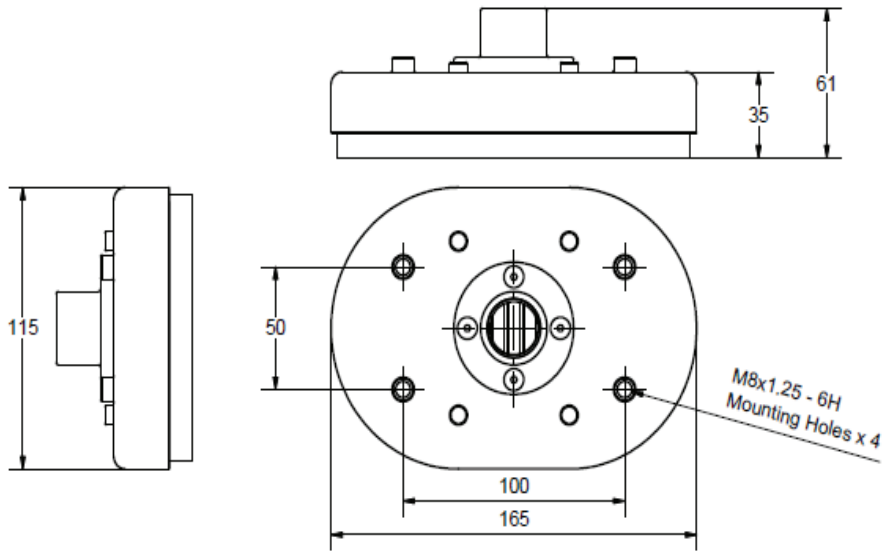

The Squid is typically used for carton handling but in the ever inceasing need for fast pick and place of pouch type food packaging, these Squid models have been specifically designed for use on the end of delta robots.

These lightweight Squid units offer the machine builder easy connection and installtion utilising the flange as shown on the models on the right.

Of course these flange connectinos can be supplied to fit various different models of delta robot.



The life expectency of the silicone vacuum cups (FDA compliant) far exceeds that of foam rubber, which is typically used in these types of pouch cartoning applications.

Contact our offices with your application details.





VACUFORCE®

NOTES