For Commercial, Institutional and Industrial Applications

Job Name _____ Contractor _____

Job Location _____ Approval _____

Engineer _____ Contractor's P.O. No. _____

Approval _____ Representative _____

LEAD FREE*

Series LFN223B, LFN223BS

Super Capacity Water Pressure Reducing Valves**

Sizes: 2½" – 3"

Series LFN223B and LFN223BS Super Capacity Water Pressure Reducing Valves are designed to reduce incoming water pressure to a sensible level to protect plumbing system components and reduce water consumption. The LFN223B/LFN223BS features Lead Free* construction to comply with Lead Free* installation requirements. This series is suitable for water supply pressures up to 300psi (20.7 bar) and may be adjusted from 25 – 75psi (172 – 517 kPa). The standard setting is 50psi (345 kPa). Series LFN223B features an enlarged diaphragm, spring cage and seat orifice for super capacity performance. Series LFN223BS has the same options as the LFN223B, except it is furnished with a Lead Free* strainer. All parts are quickly and easily serviceable without removing the valve from the line. The standard bypass feature permits the flow of water back through the valve into the main when pressures, due to thermal expansion on the outlet side of the valve, exceed the pressure in the main supply.

Features

- Enlarged diaphragm, spring cage and seat orifice for super capacity performance
- Lead Free* cast copper silicon alloy body construction
- Serviceable in line
- Series LFN223BS furnished with separate Lead Free* strainer
- Standard bypass feature controls thermal expansion pressure***
- Sealed spring cage on all models for accessible outdoor or pit installations

Specifications

A Lead Free* Water Pressure Reducing Valve shall be installed on the water service pipe near its entrance to the building where supply main pressure exceeds 60psi (413 kPa) to reduce it to 50psi (345 kPa) or lower. The water pressure reducing valve shall be constructed using Lead Free* materials. Lead Free* regulators shall comply with state codes and standards, where applicable, requiring reduced lead content. Provision shall be made to permit the bypass flow of water back through the valve into the main when pressures, due to thermal expansion on the outlet side of the valve, exceed the pressure in the main supply. Pressure reducing valves with built-in bypass check valves and strainer will be acceptable. Approved valves shall comply with ASSE 1003. Valve shall be a Watts Series LFN223B or LFN223BS (with strainer).



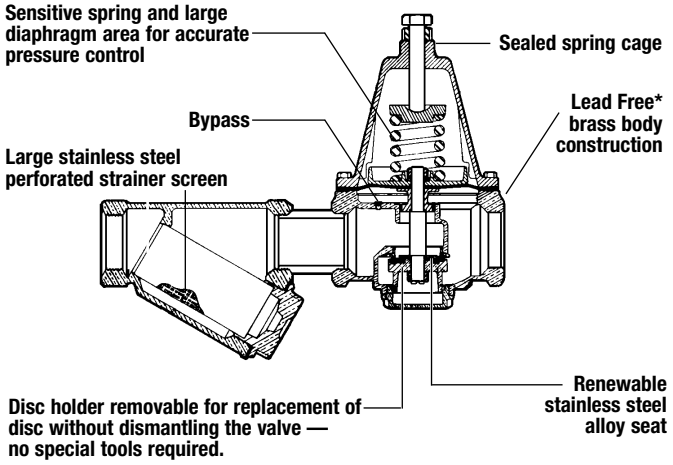

*The wetted surface of this product contacted by consumable water contains less than 0.25% of lead by weight.

**A water saving test program concluded that reducing the supply pressure from 80-50psi (551-345 kPa) resulted in a water savings of 30%.

***The bypass feature will not prevent the pressure relief valve from opening on the hot water supply system with pressure above 150psi (10.3 bar).

NOTICE

The information contained herein is not intended to replace the full product installation and safety information available or the experience of a trained product installer. You are required to thoroughly read all installation instructions and product safety information before beginning the installation of this product.

NOTICE

Inquire with governing authorities for local installation requirements

Watts product specifications in U.S. customary units and metric are approximate and are provided for reference only. For precise measurements, please contact Watts Technical Service. Watts reserves the right to change or modify product design, construction, specifications, or materials without prior notice and without incurring any obligation to make such changes and modifications on Watts products previously or subsequently sold.

WATTS®

Models

2½"	LFN223M2-B	NPT threaded female inlet x NPT threaded female outlet
3"	LFN223M1-B	NPT threaded female inlet x NPT threaded female outlet
2½"	LFN223M2-BS	NPT threaded female inlet with strainer x NPT threaded female outlet
3"	LFN223M1-BS	NPT threaded female inlet with strainer x NPT threaded female outlet

For ½" – 2½" threaded connections, refer to literature ES-LF223.

For 3" flanged connections, refer to literature ES-LF223F.

Materials

Body:	Lead Free* cast copper silicon alloy
Seat:	Replaceable stainless steel alloy
Strainer Screen:	Stainless steel (model LFN223S)
Diaphragm:	Reinforced Buna-N
Valve Disc:	EPDM

Pressure – Temperature

Temperature Range: 33°F – 160°F (0.5°C – 71°C)

Maximum Working Pressure: 300psi (20.7 bar)

Adjustable Reduced Pressure Range: 25 – 75psi (172 – 517 kPa)

Standard Reduced Pressure Setting: 50psi (345 kPa)

Standards

Both 2½" and 3" are listed to ASSE 1003 through IAPMO (UPC).

The 2½" is also listed to ASSE 1003 through ASSE.

Both 2½" and 3" are listed to NSF 61-G

Options

HP High pressure range 75 – 125psi (172 – 862 kPa)

2½" HP, LP, G and GC options

3" HD option

Capacity

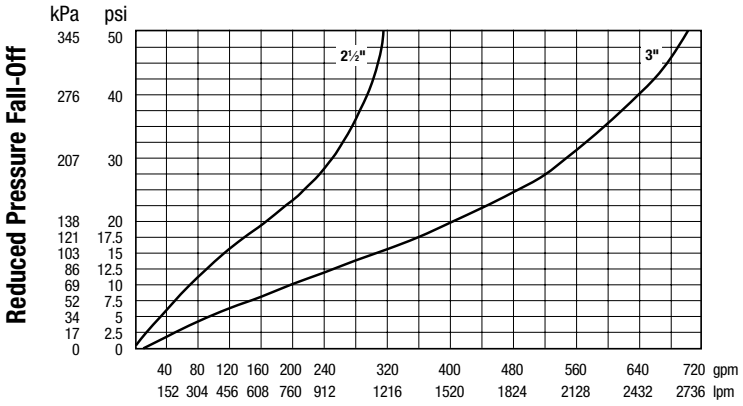

I.P. = 83 psi, R.P. = 50 psi Lockup

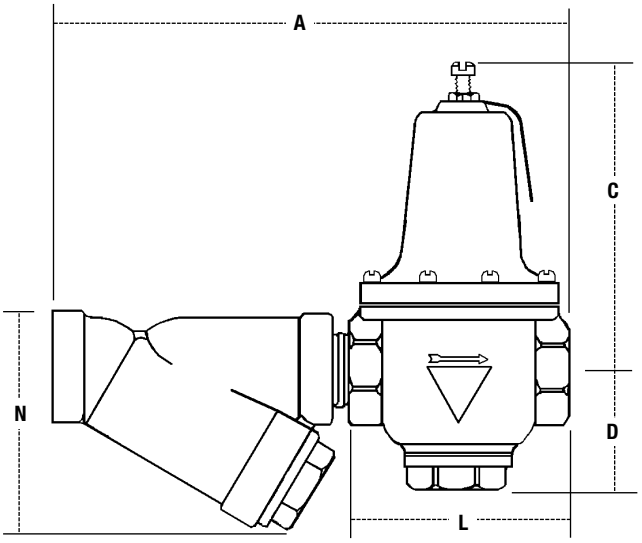

Dimensions — Weights

SIZE	DIMENSIONS										WEIGHT			
	A (LFN223BS)		C		D		L		N (LFN223BS)		LFN223B		LFN223BS	
in.	*in.*	*mm*	*in.*	*mm*	*in.*	*mm*	*in.*	*mm*	*in.*	*mm*	*lbs.*	*kgs*	*lbs.*	*kgs*
2½	17	432	10¾	273	2⅞	73	7⅞	200	5	127	30	13.6	44	20.0
3	20¾	527	12¾	324	4⅛	105	10½	267	6¾	172	71	32.2	95	43.0

USA: T: (978) 689-6066 • F: (978) 975-8350 • Watts.com

Canada: T: (905) 332-4090 • F: (905) 332-7068 • Watts.ca

Latin America: T: (52) 81-1001-8600 • Watts.com

© 2013 Watts