VACUFORCE®

CUP HOLDERS

VACUUM CUP HOLDERS

The Vacuforce cup holders, often referred to as level compensators, are normally used on multiple vacuum cup systems such as sheet or plate handling where the height of the load varies during production cycles. These cup holders have been developed with the best materials to offer maximum life in the toughest applications.



Materials

- Hard anodized aluminum thread fittings
- Nickel Plated bushings and lock nuts
- Hard anodized aluminum or chrome plated steel rods

VFLC	EX	NR	18	25	M16	X40
	Spring Type	Rotating	Cup Thread	Buffer Stroke	Bulkhead Thread	Bulkhead Length

Spring Type	
EX	External
IN	Internal

Rotating	
NR	Non-Rotating
	Rotating

Cup Thread	
M5	M5
18	G1/8
14	G1/4
38	G3/8
12	G1/2

Non-Rotating Models

Non-Rotating models are used in applications where a single unit is being used for pick and place. They are also suitable for connection to a square or oval suction cup where orientation of the cup and part must remain constant.

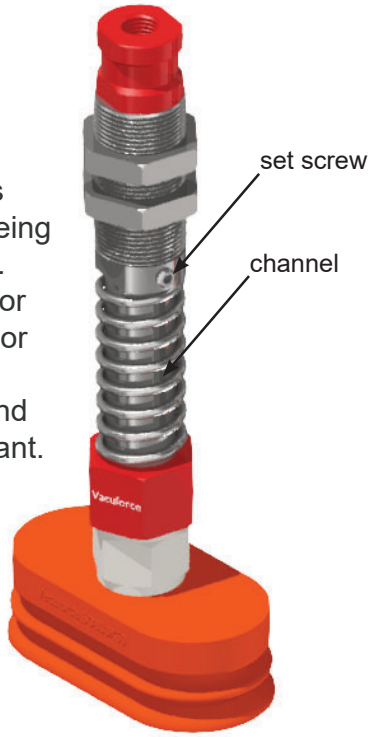

Rotating Models



VFLCINM515M10X23

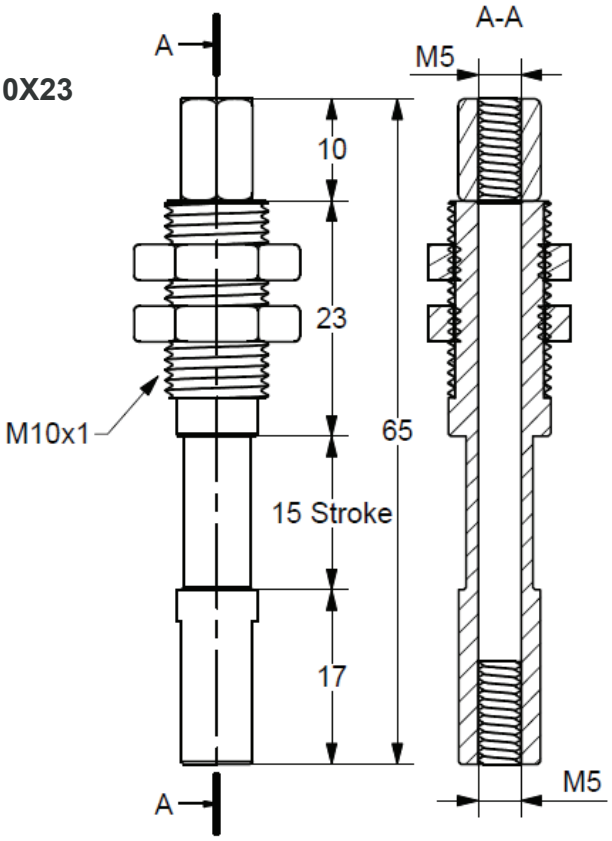

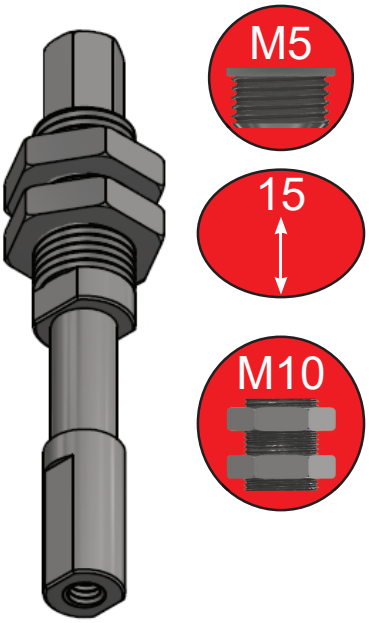

VACUUM CUP HOLDERS G1/8

VFLCIN1820M16X35

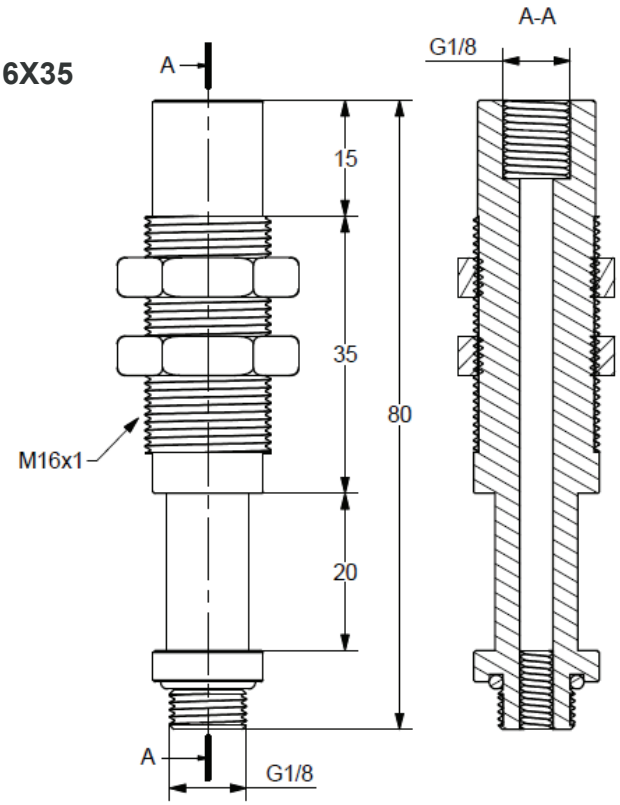

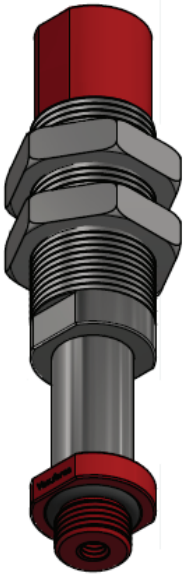

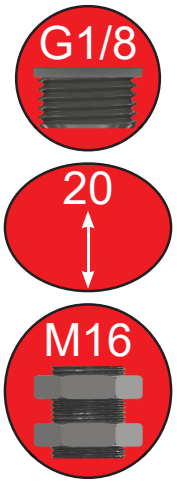

VFLCINNR1820M16X40

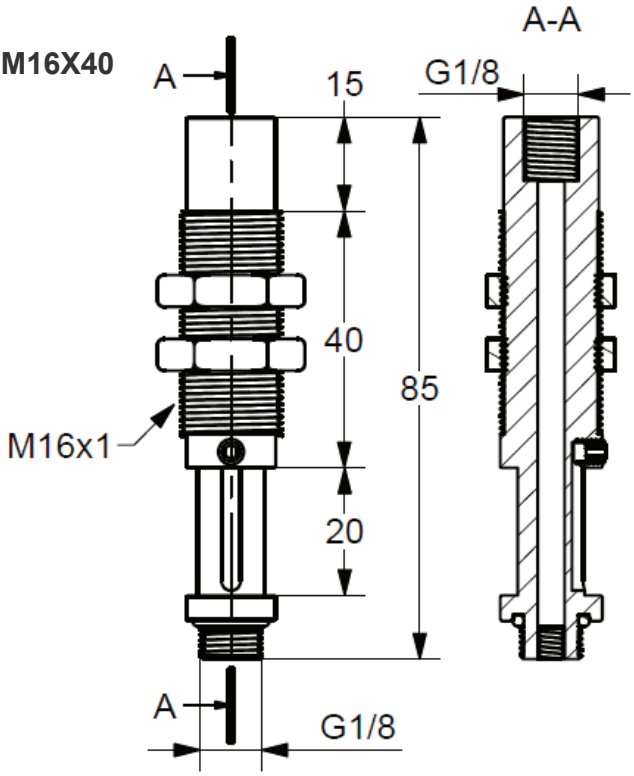

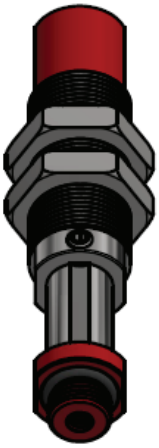

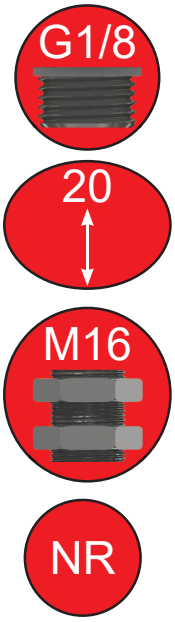

VFLCEX1825M16X40

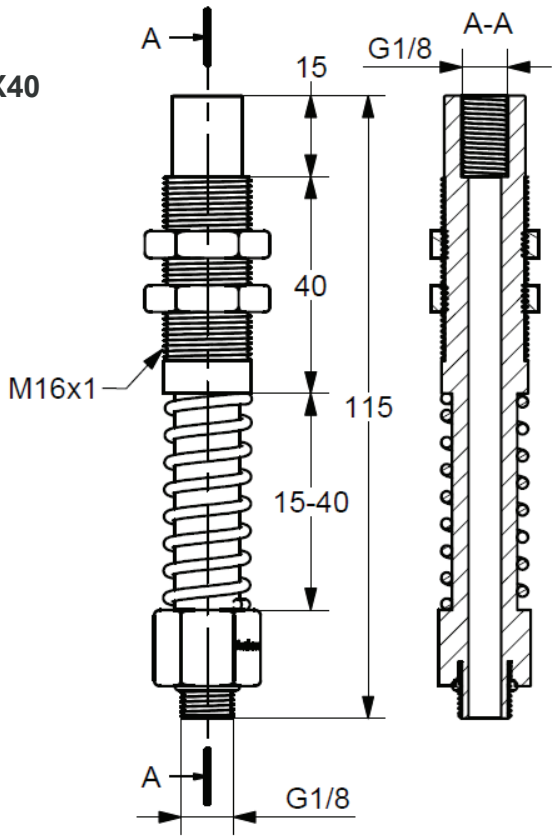



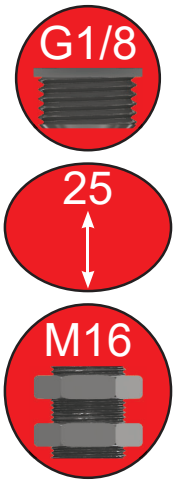

VFLCEXNR1825M16X40

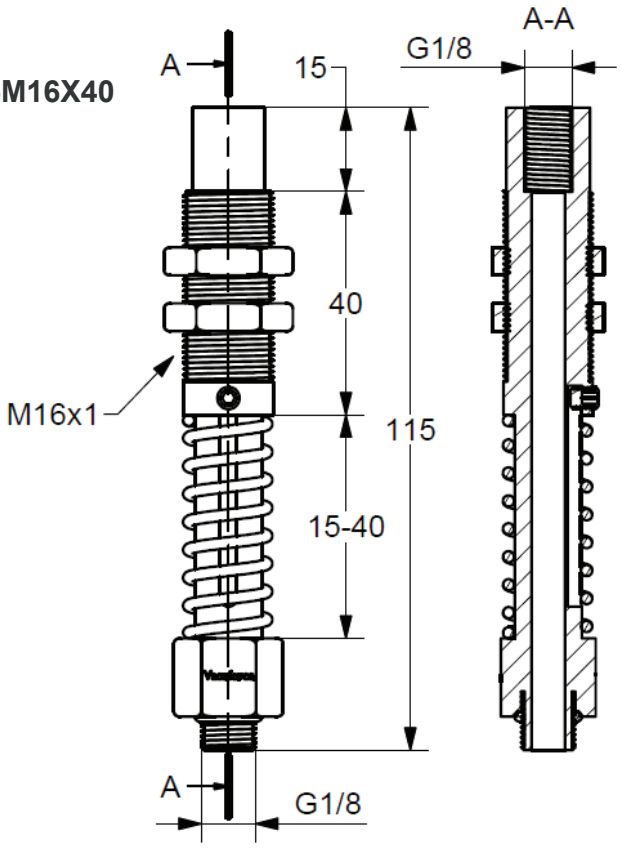



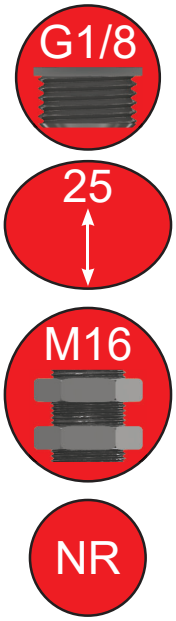

VACUUM CUP HOLDERS G1/8

VFLCIN1830M16X49

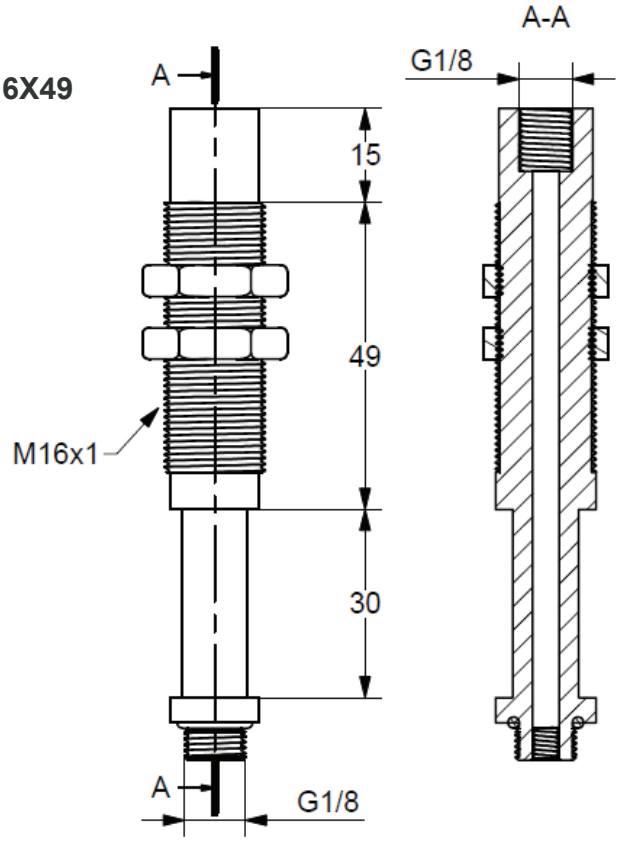

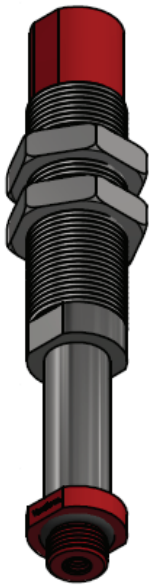

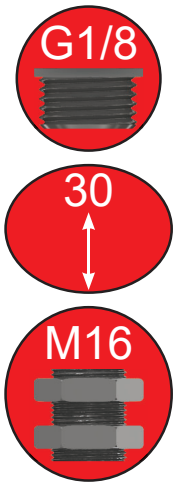

VFLCINNR1830M16X53

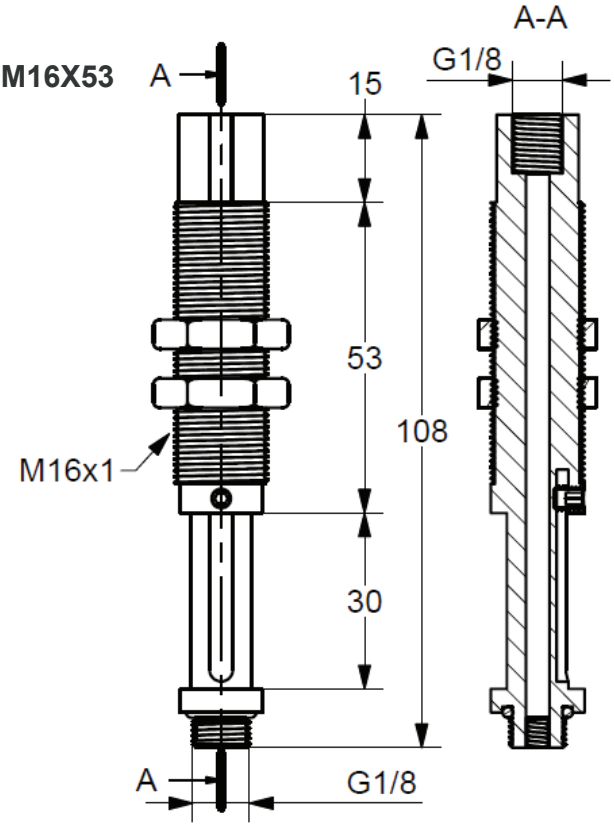

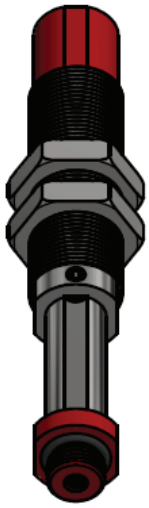

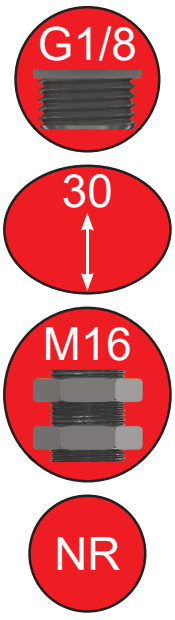

VFLCEX1850M16X60

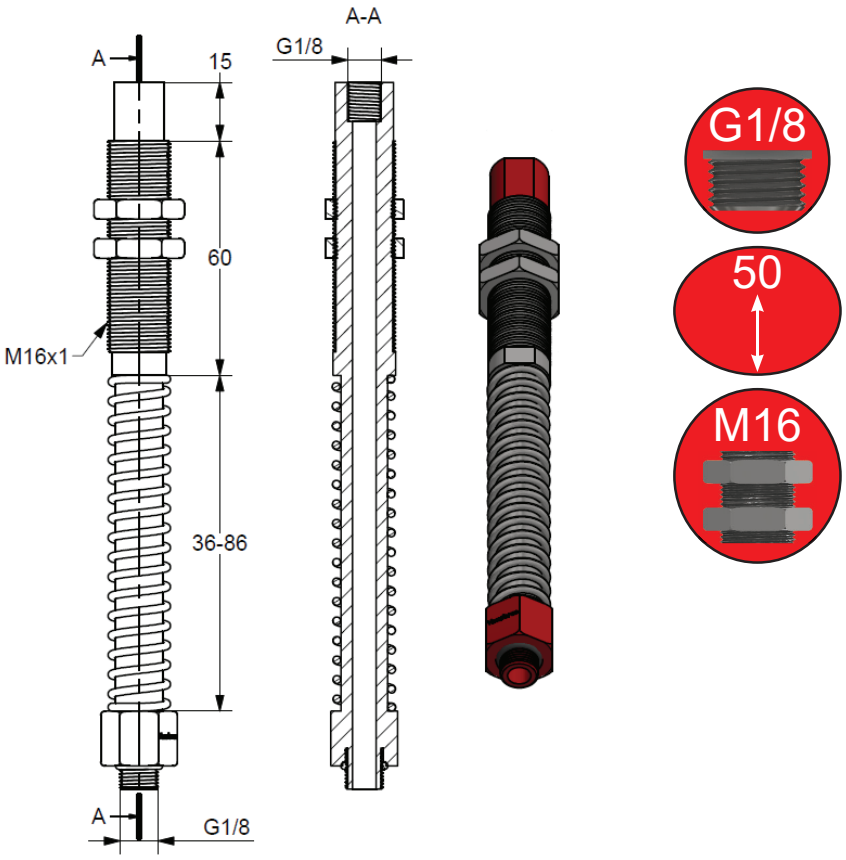

VFLCEXNR1850M16X60

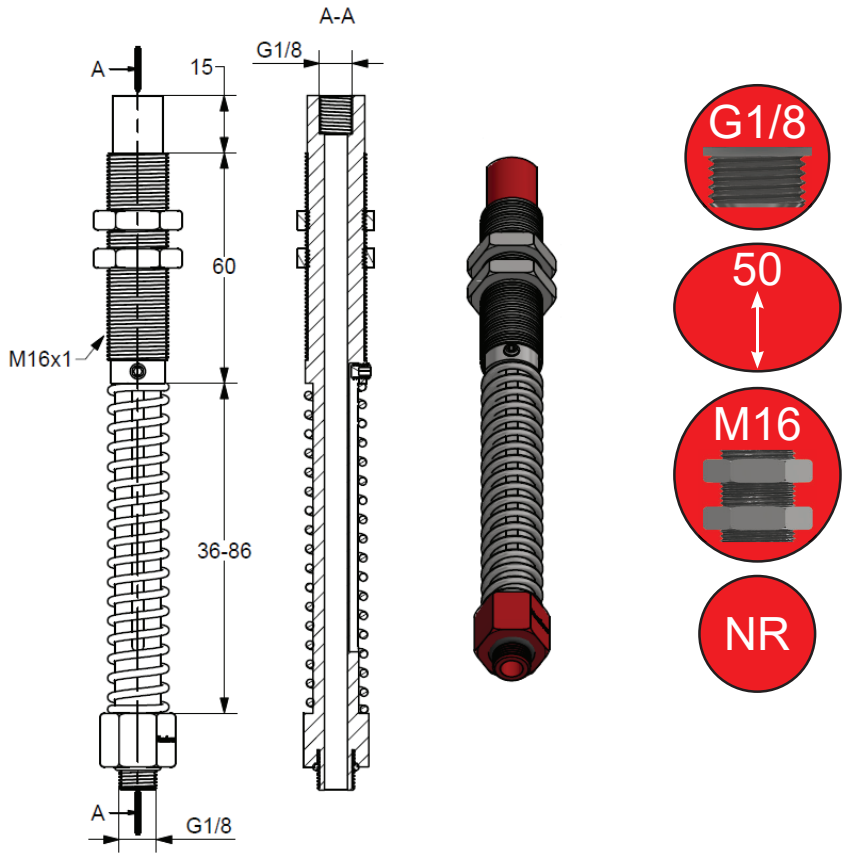

VACUUM CUP HOLDERS G1/8

VFLCEX1875M16X80

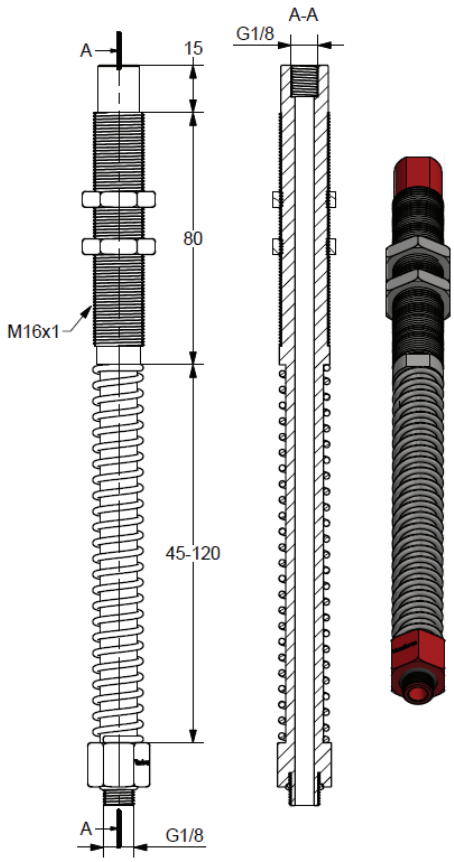

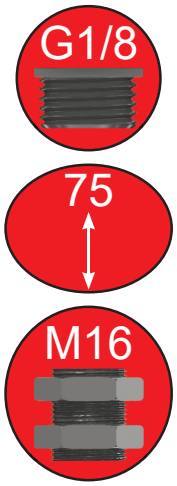

VFLCEXNR1875M16X80

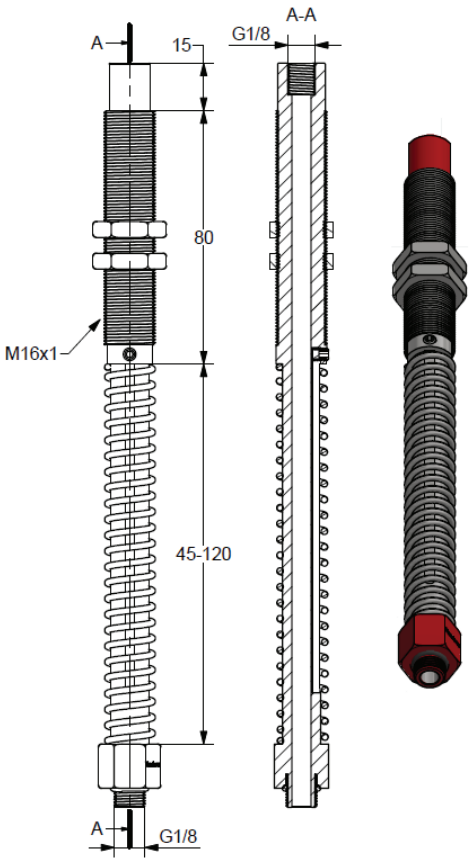

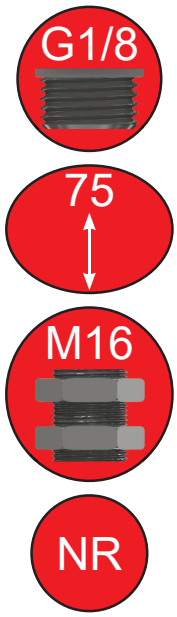

VACUUM CUP HOLDERS G1/8

VFLCEX18100M16X80

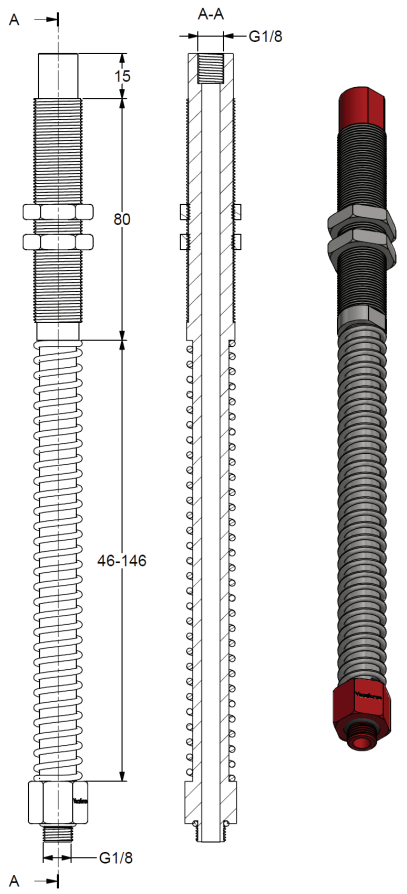

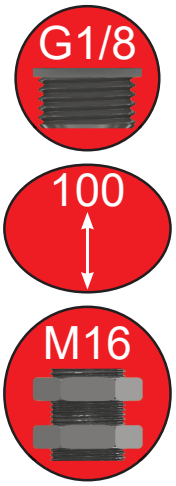

VFLCEXNR18100M16X80

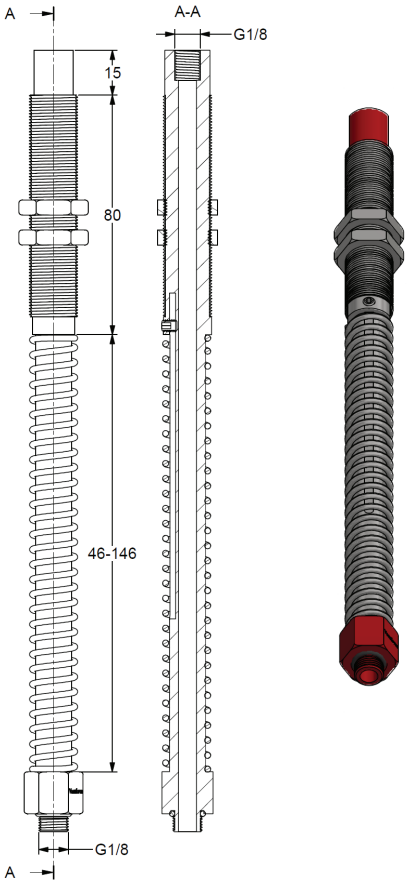

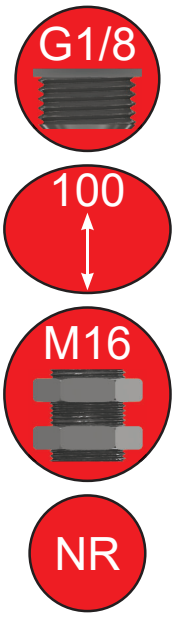

VACUUM CUP HOLDERS G1/4

VFLCEX1425M16X40

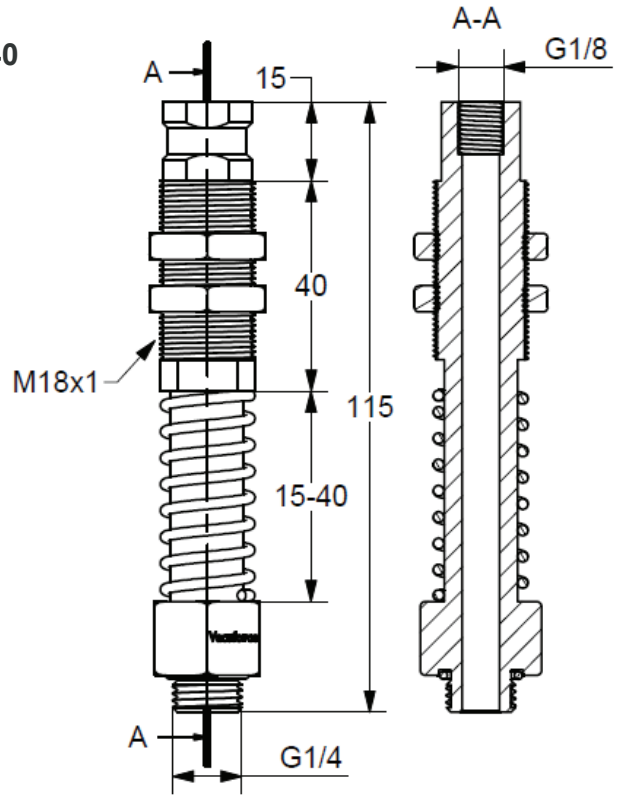

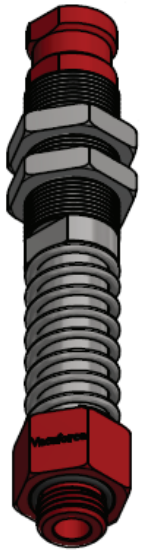

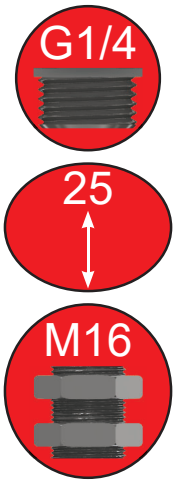

VFLCEXNR1425M16X40

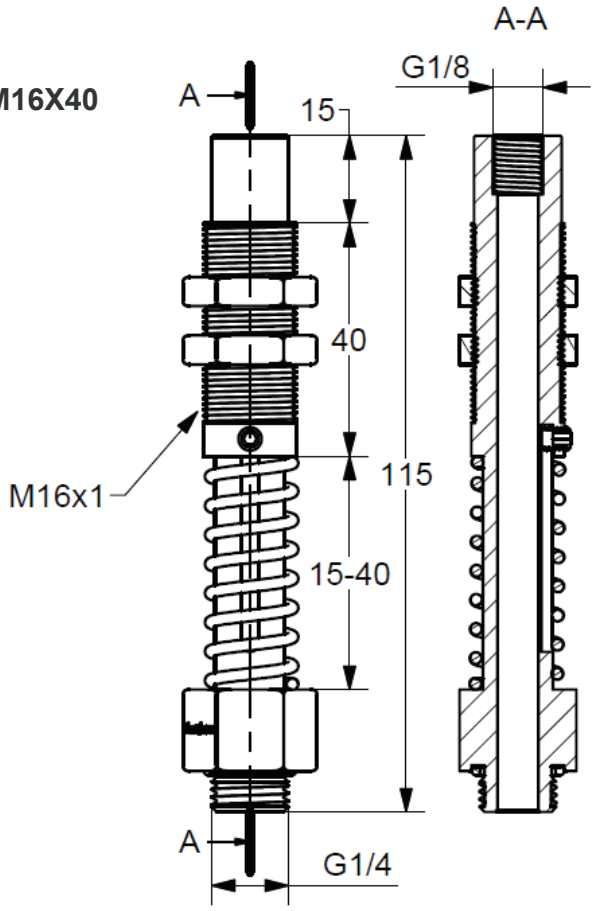



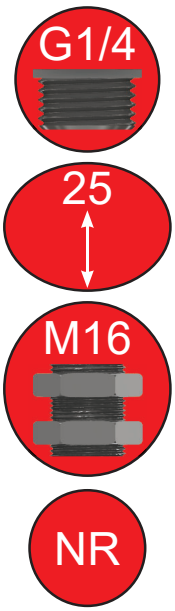

VFLCEX1425M18X40

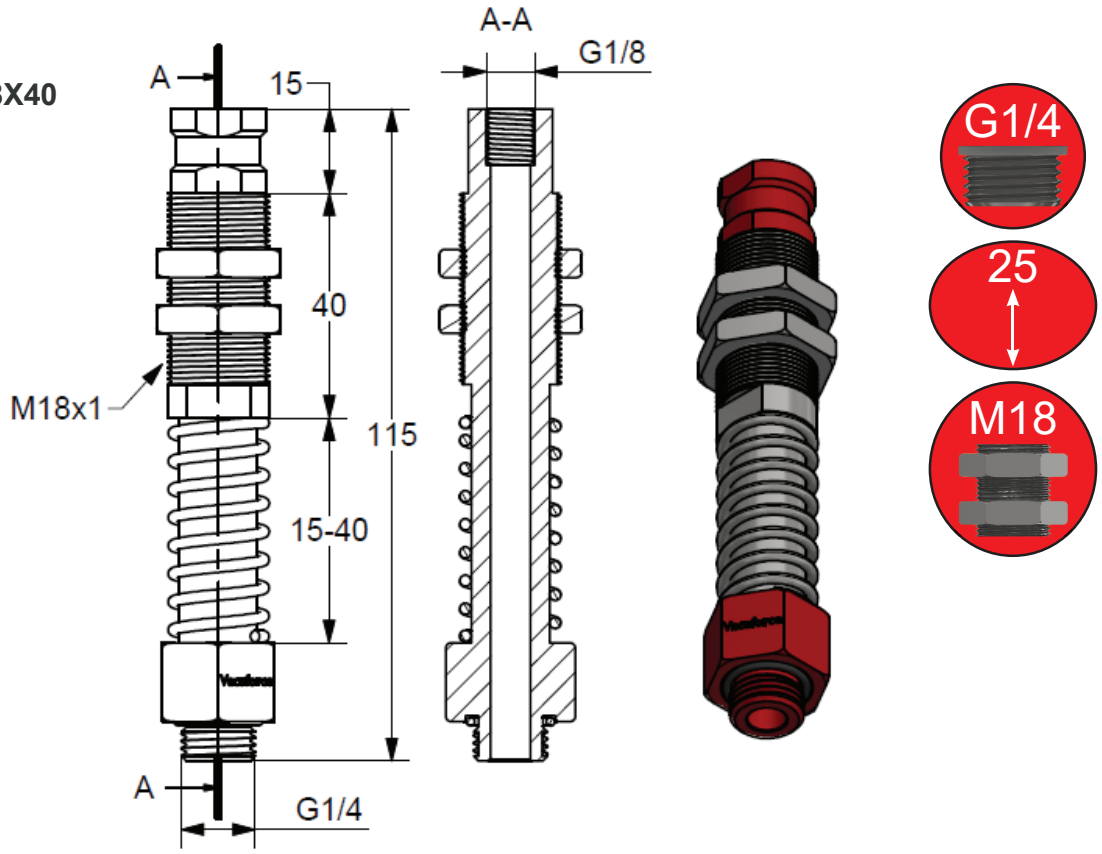

VFLCEXNR1425M18X40

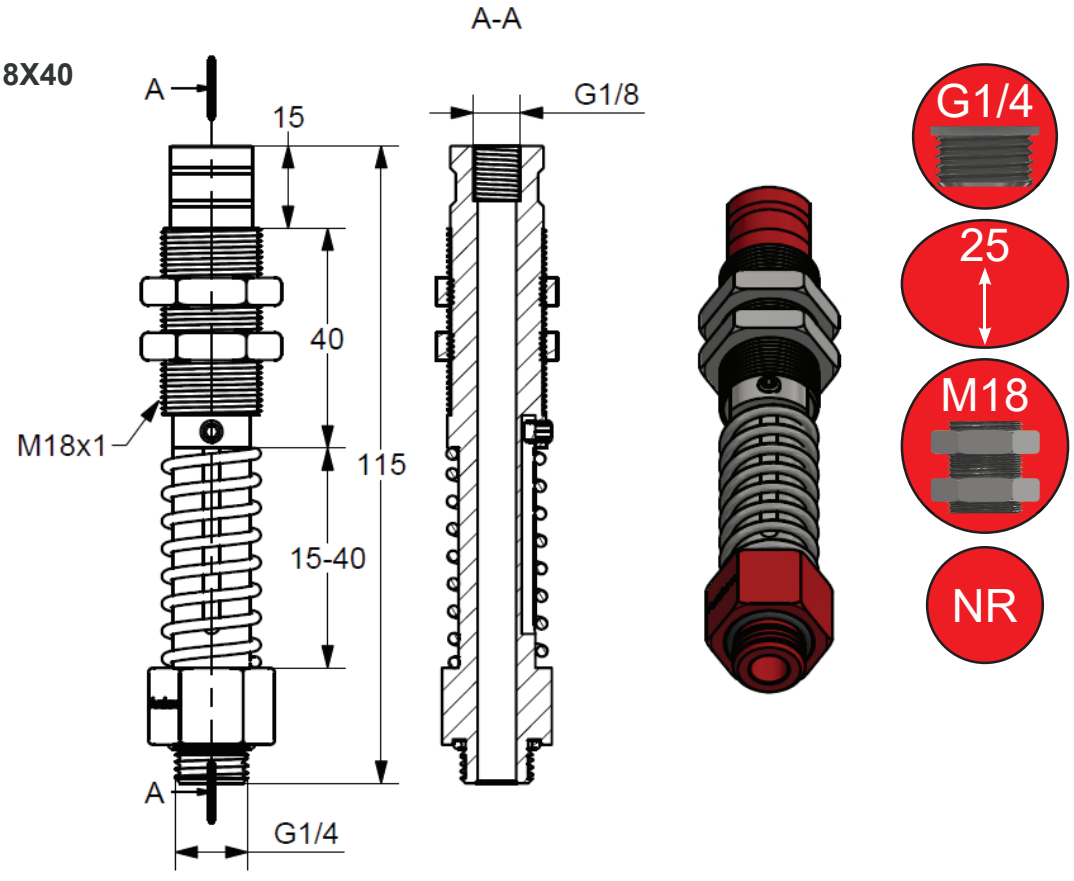

VACUUM CUP HOLDERS G1/4

VFLCEX1450M16X60

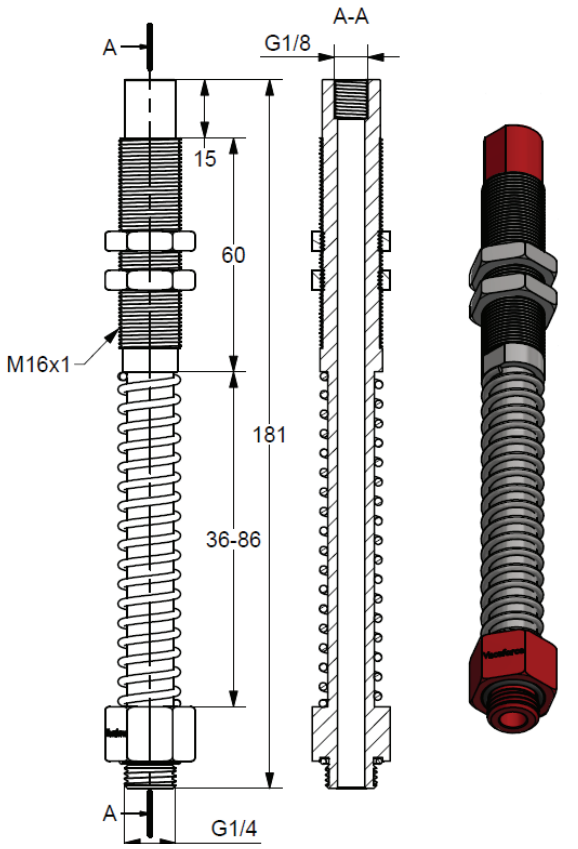

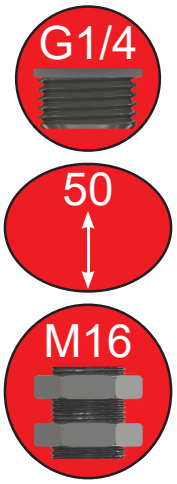

VFLCEXNR1450M16X60

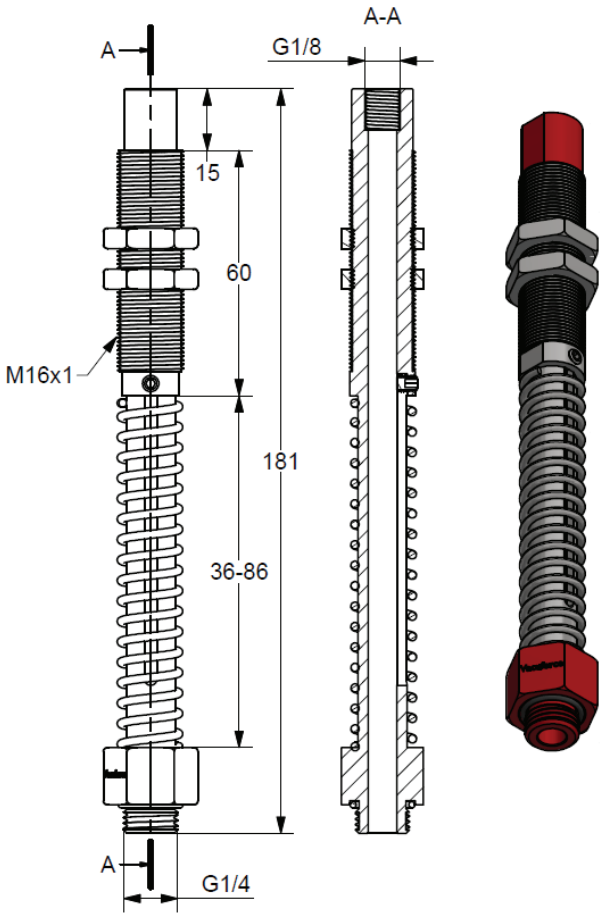

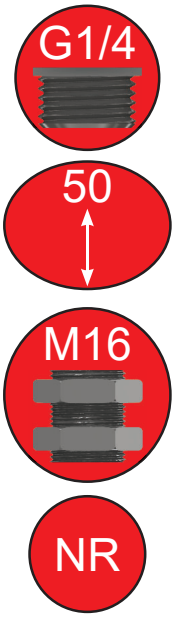

VFLCEX1450M18X60

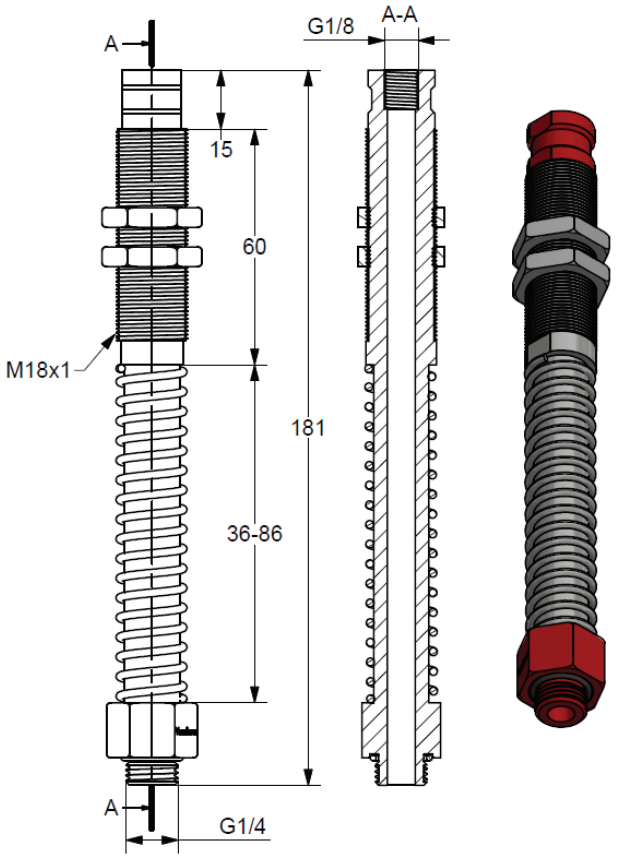

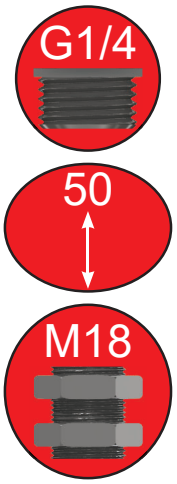

VFLCEXNR1450M18X60

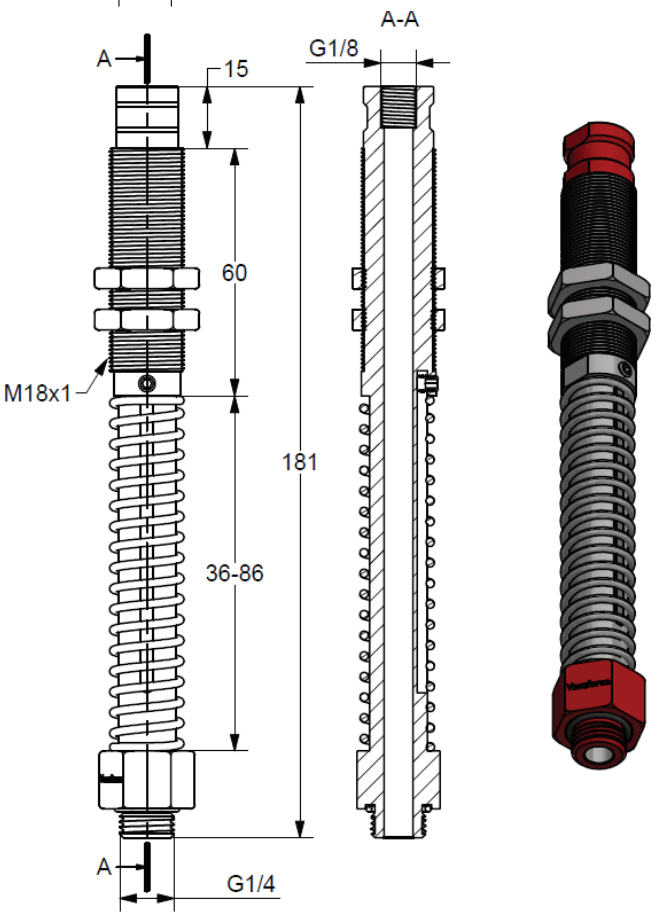

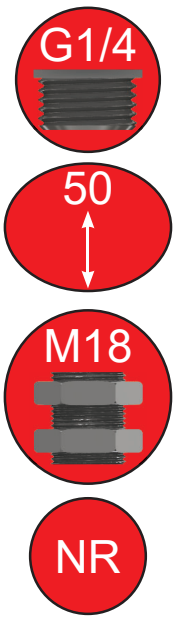

VACUUM CUP HOLDERS G1/4

VFLCEX1475M16X80

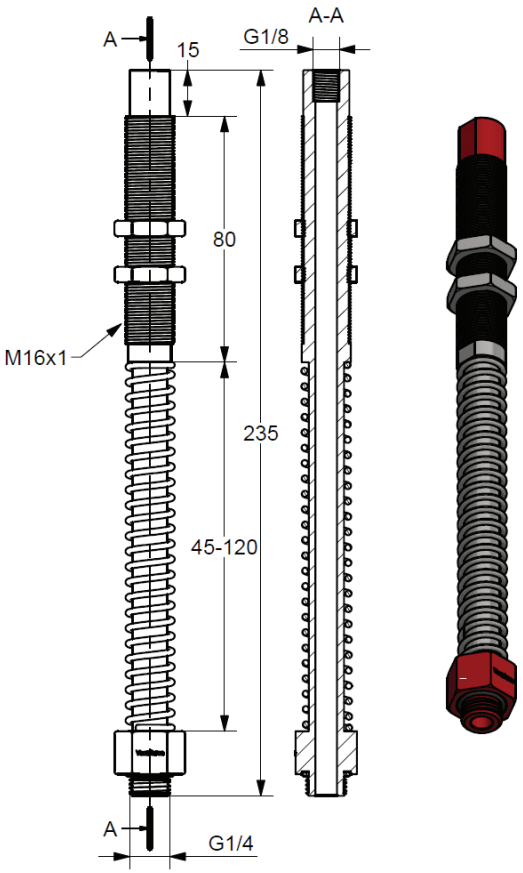

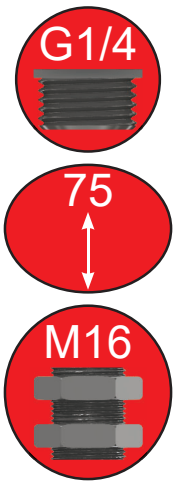

VFLCEXNR1475M16X80

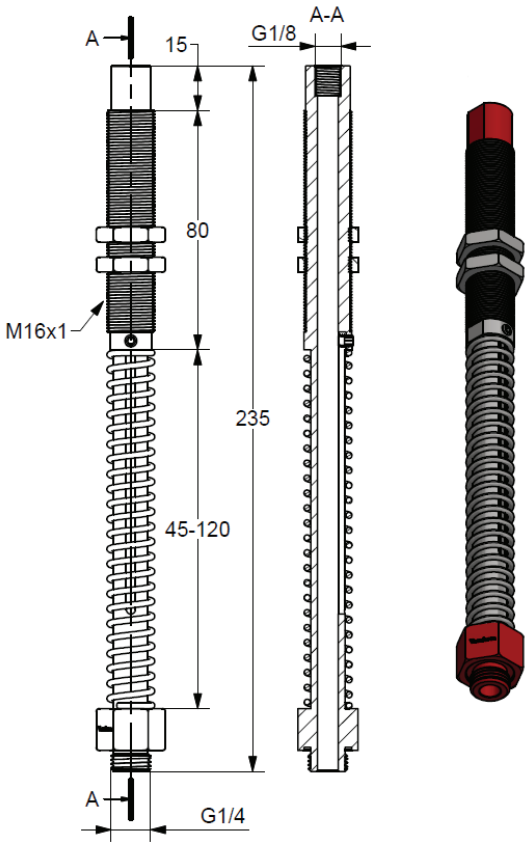

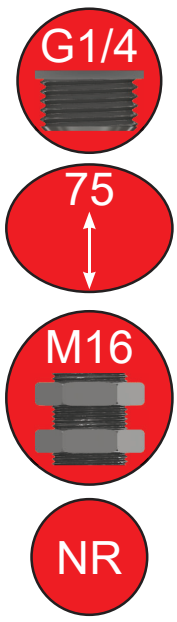

VFLCEX1475M18X80

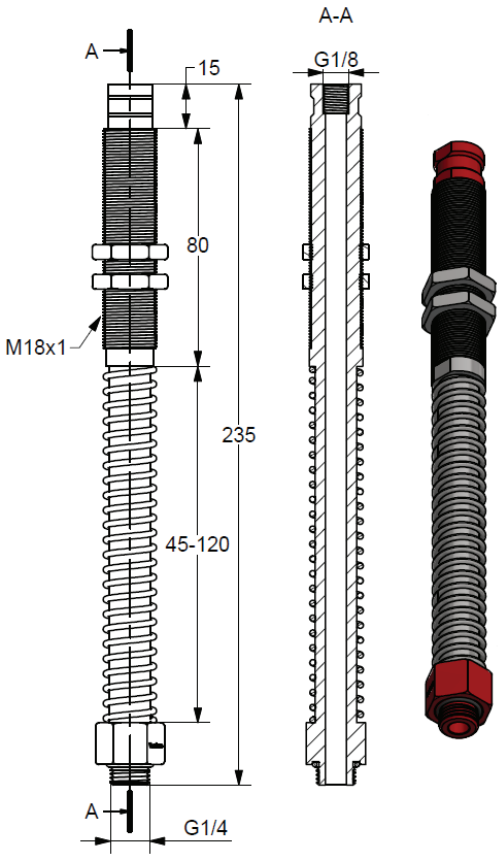

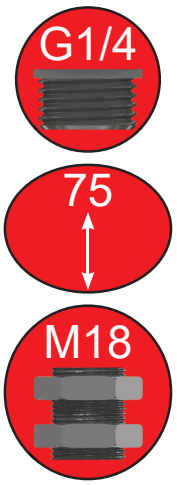

VFLCEXNR1475M18X80

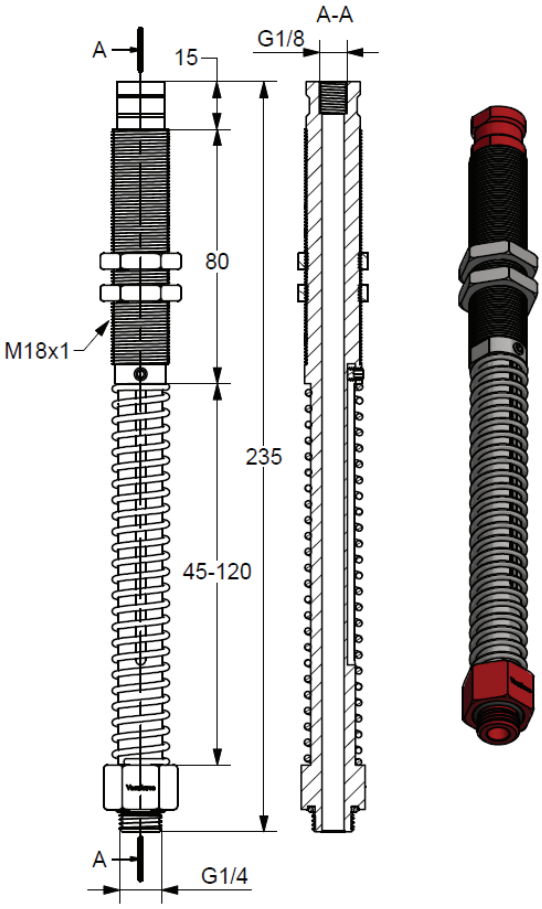

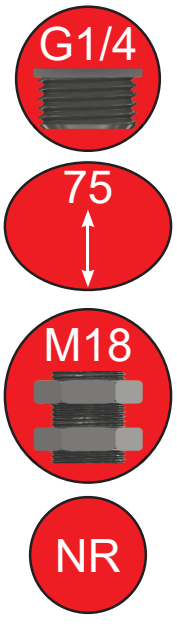

VACUUM CUP HOLDERS G1/4

VFLCEX14100M16X80

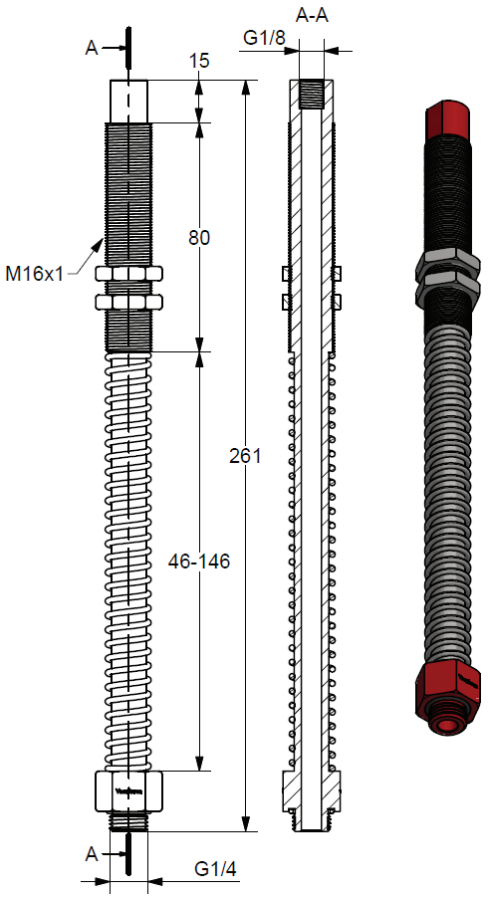

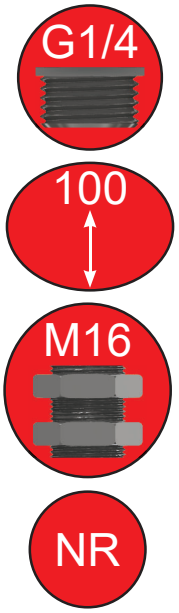

VFLCEXNR14100M16X80

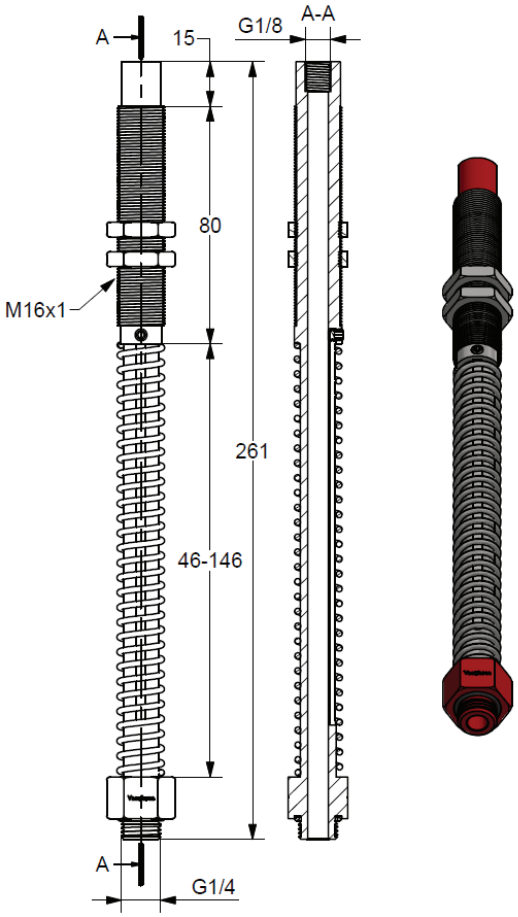

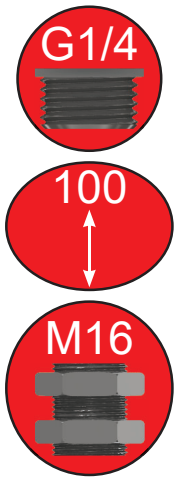

VFLCEX14100M18X80

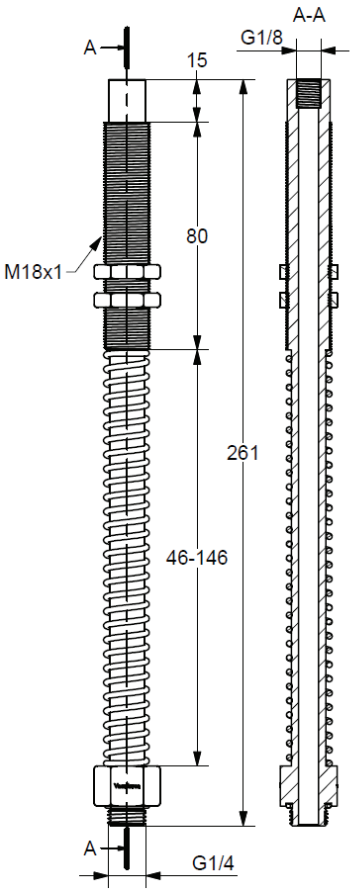

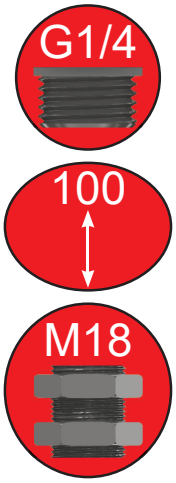

VFLCEXNR14100M18X80

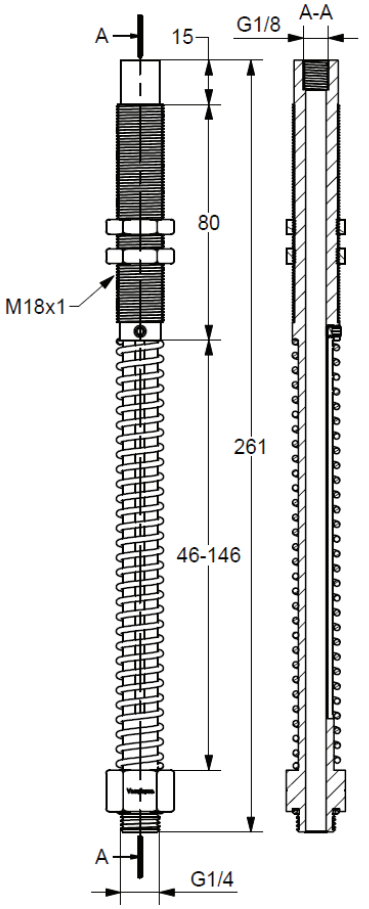

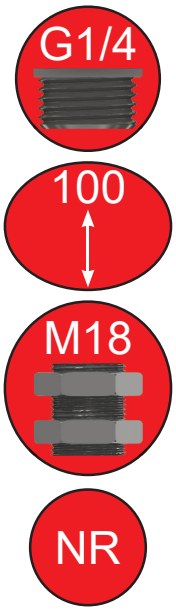

VACUUM CUP HOLDERS G1/4

VFLCIN1425M18X42

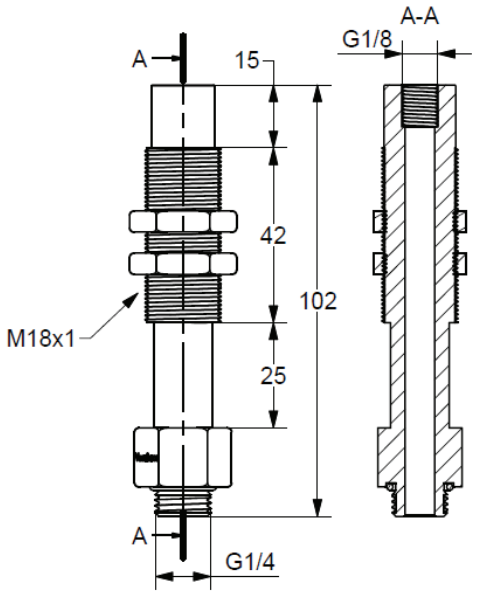

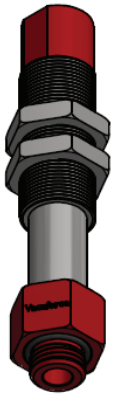

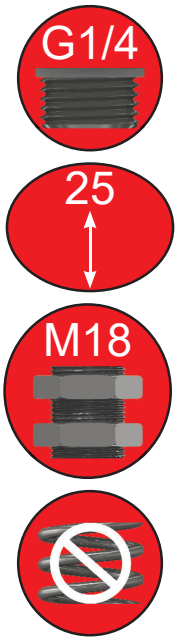

VFLCIN1450M18X67

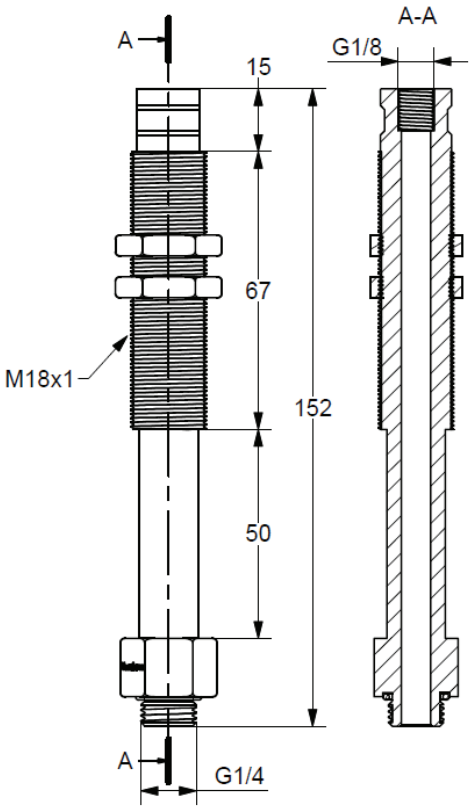

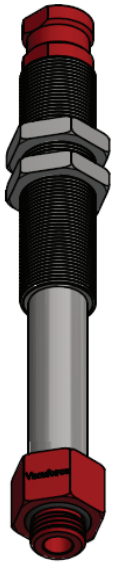

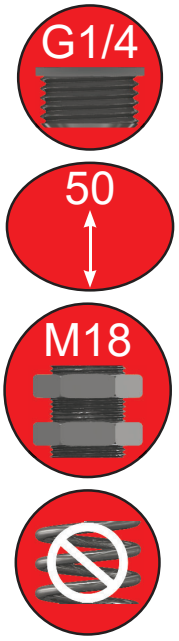

VFLCEX3825M18X40

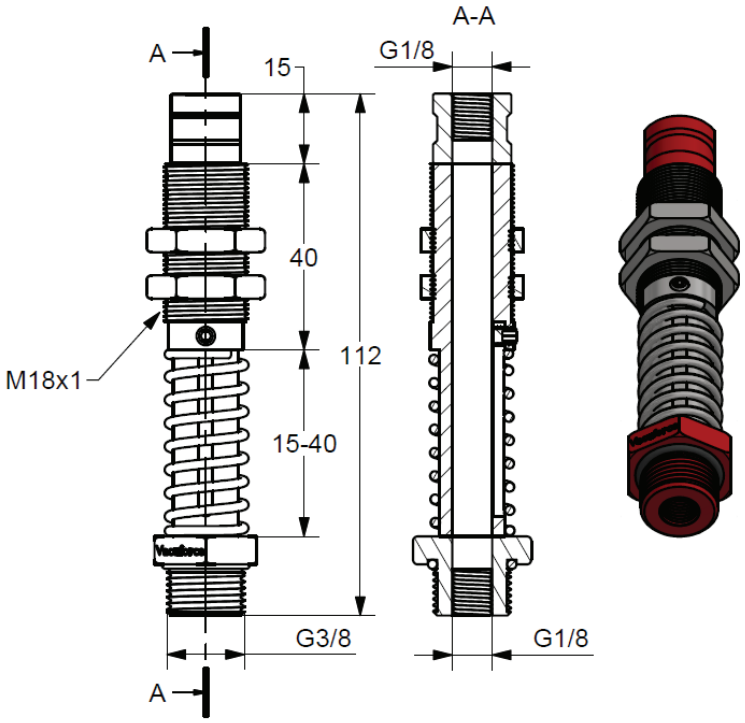

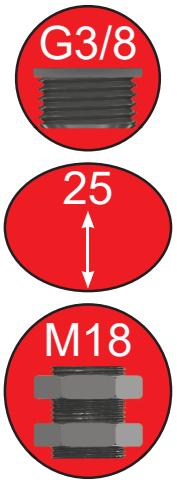

VFLCEXNR3825M18X40

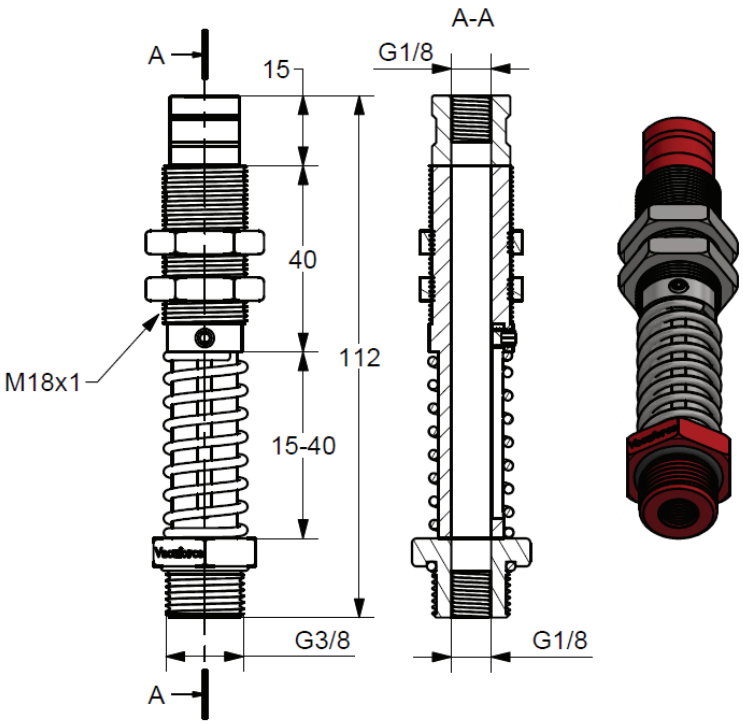

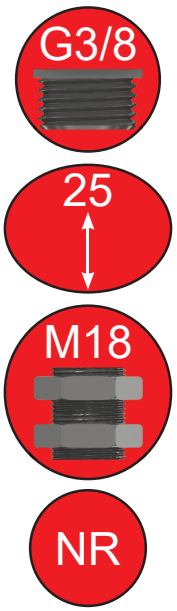

VACUUM CUP HOLDERS G3/8

VFLCEX3825M20X40

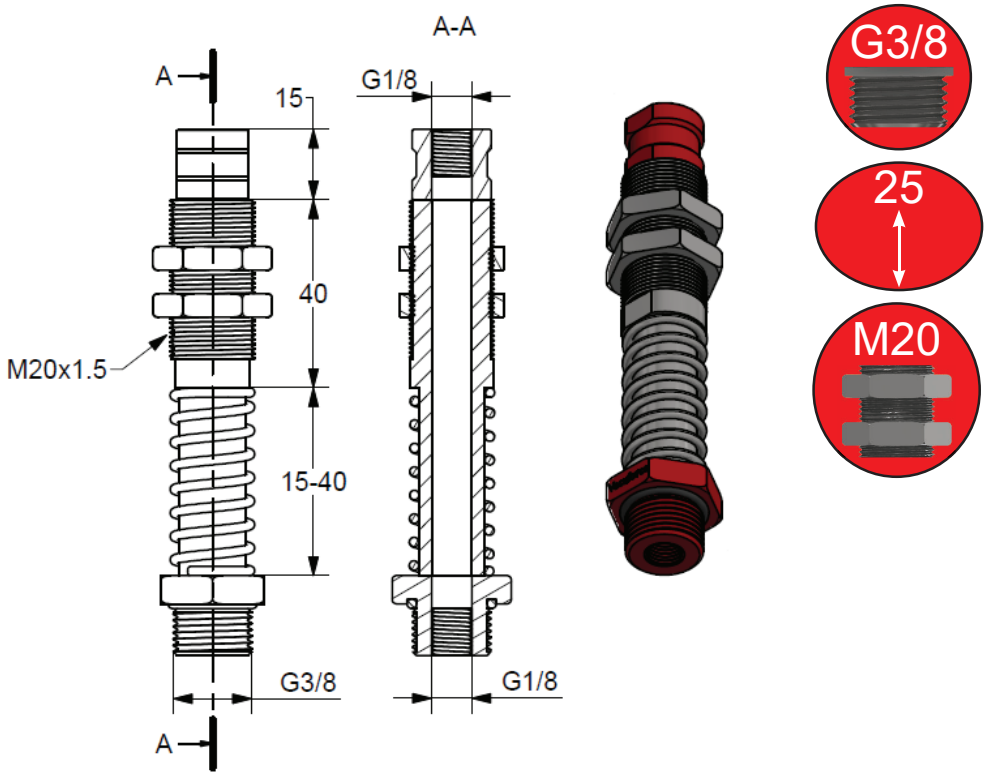

VFLCEX3850M18X60

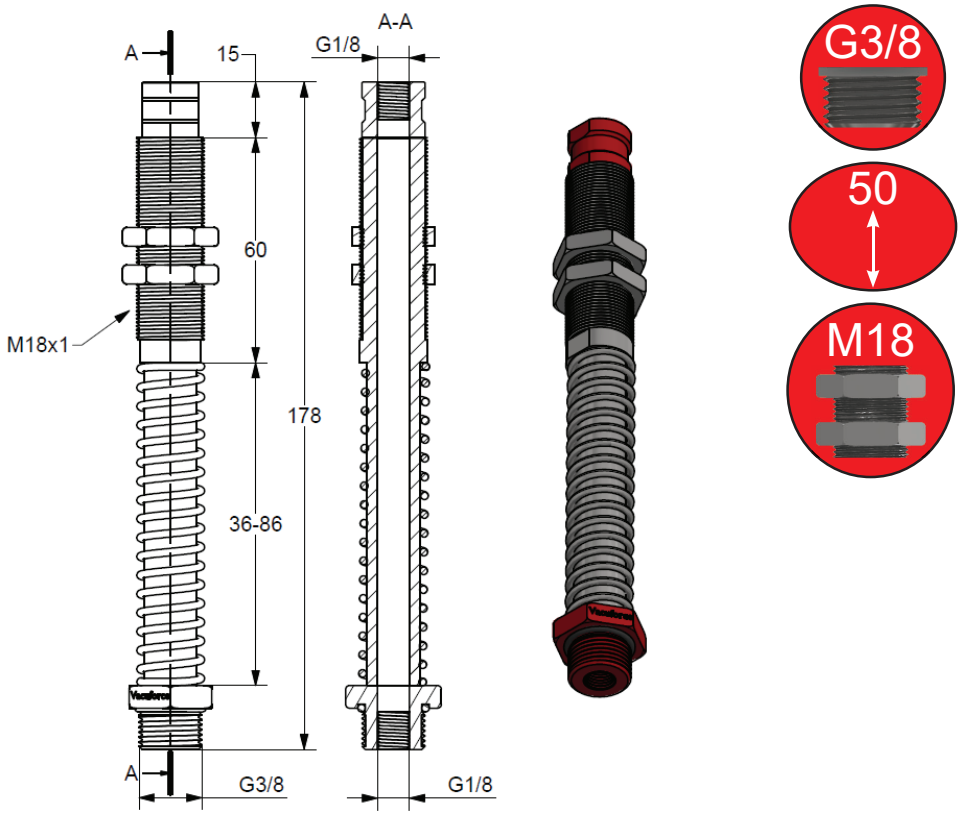

VFLCEXNR3850M18X60

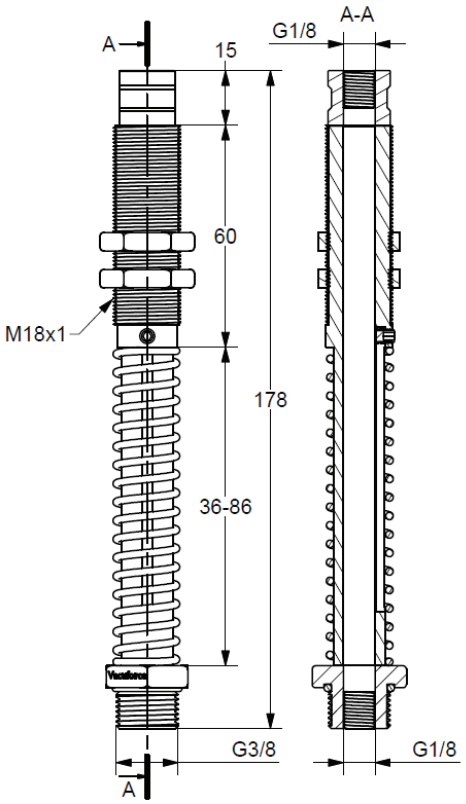



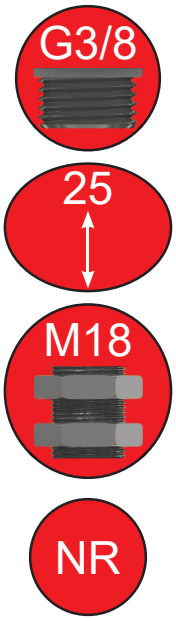

VFLCEX3850M20X60

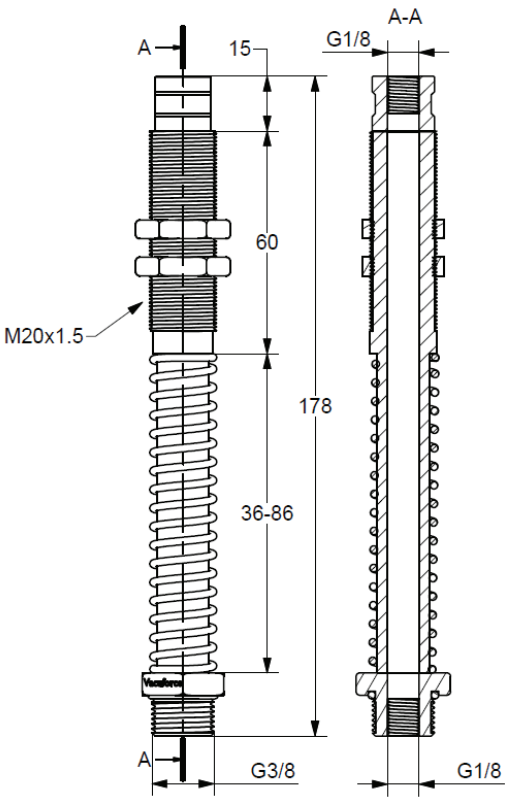



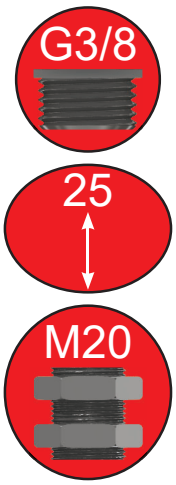

VACUUM CUP HOLDERS G3/8

VFLCEX3875M18X80

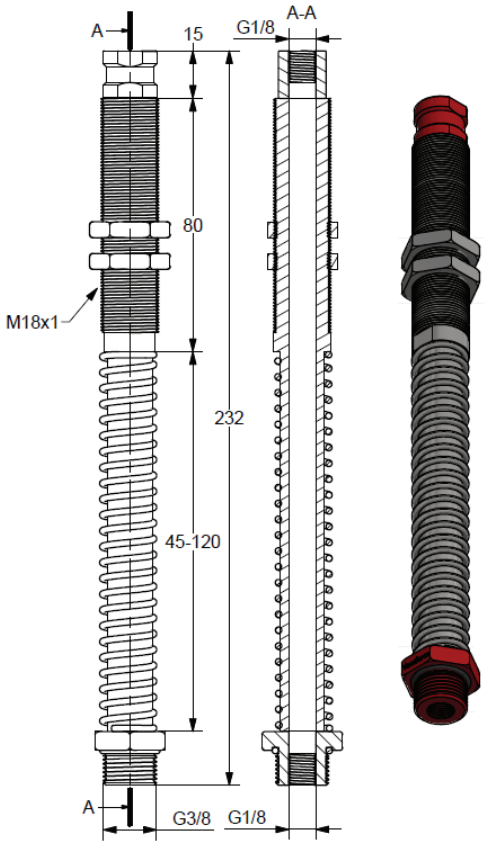

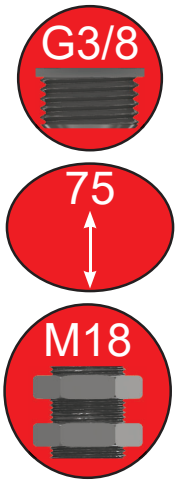

VFLCEXNR3875M18X80

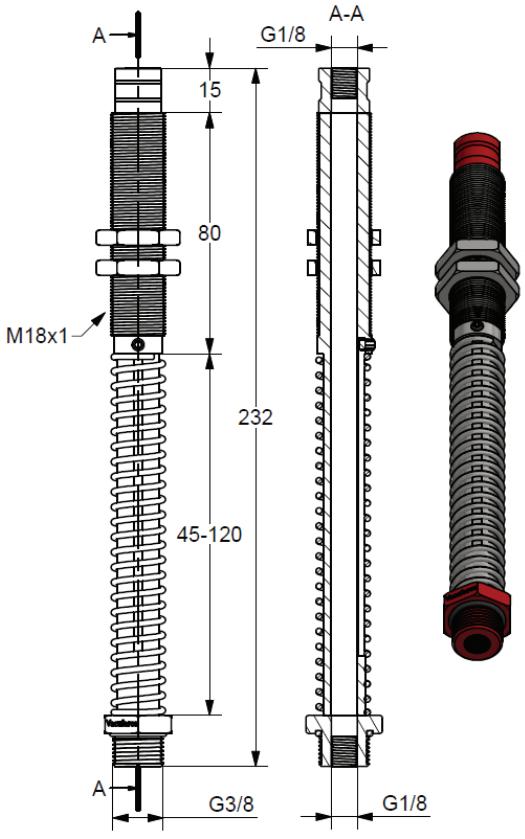

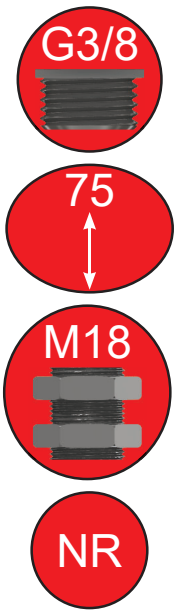

VFLCEX3875M20X80

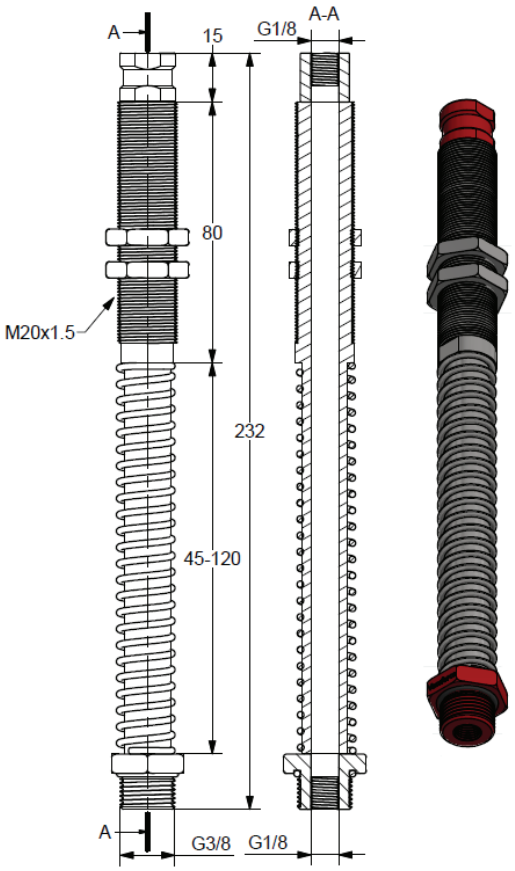

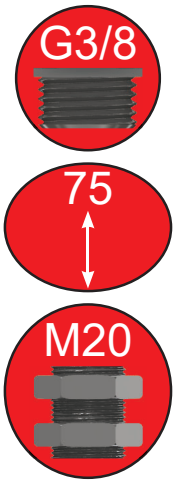

VFLCEX38100M18X80

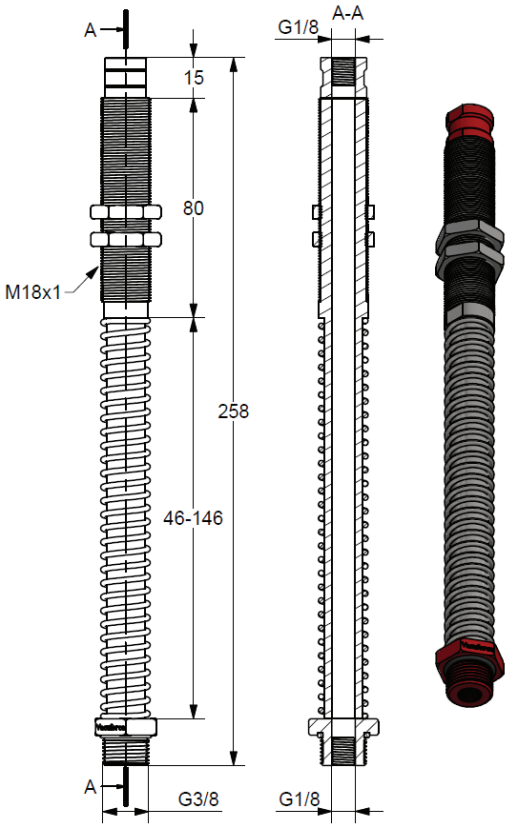

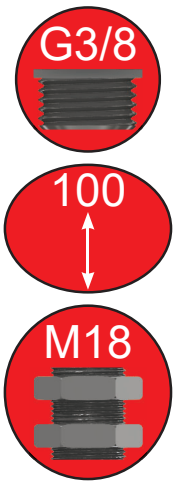

VACUUM CUP HOLDERS G3/8

VFLCEXNR38100M18X80

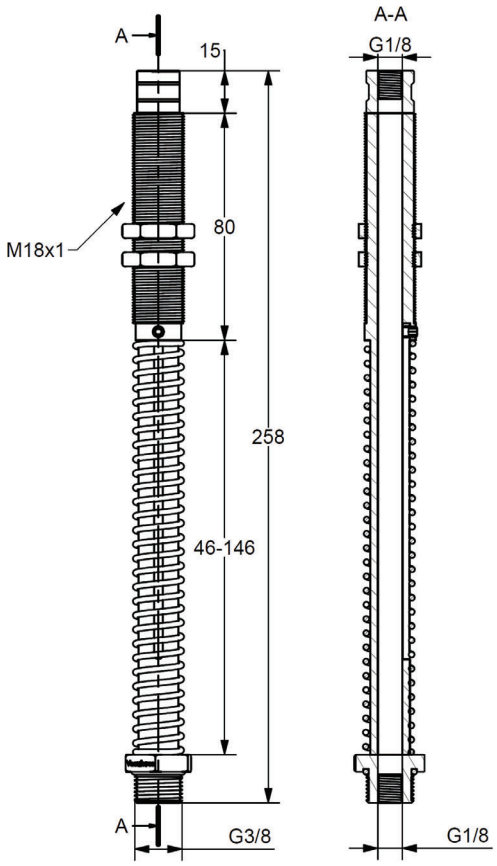

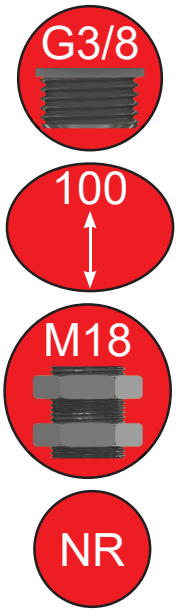

VFLCIN3850M18X67

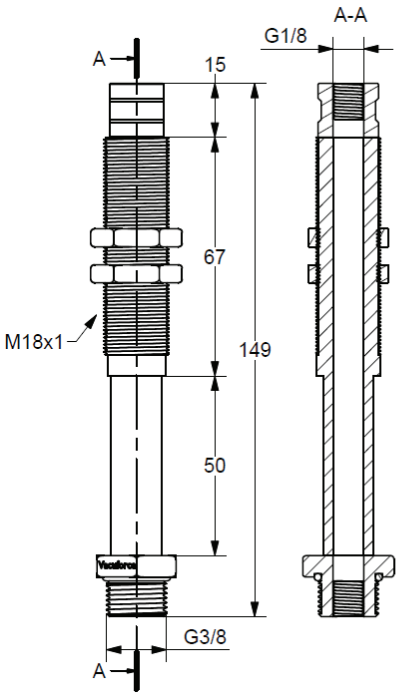

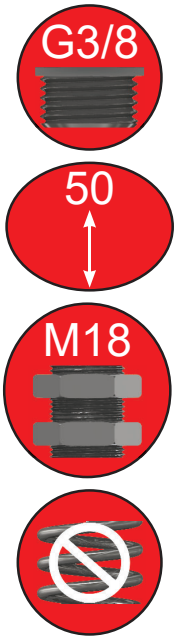

VFLCEX1225M20X40

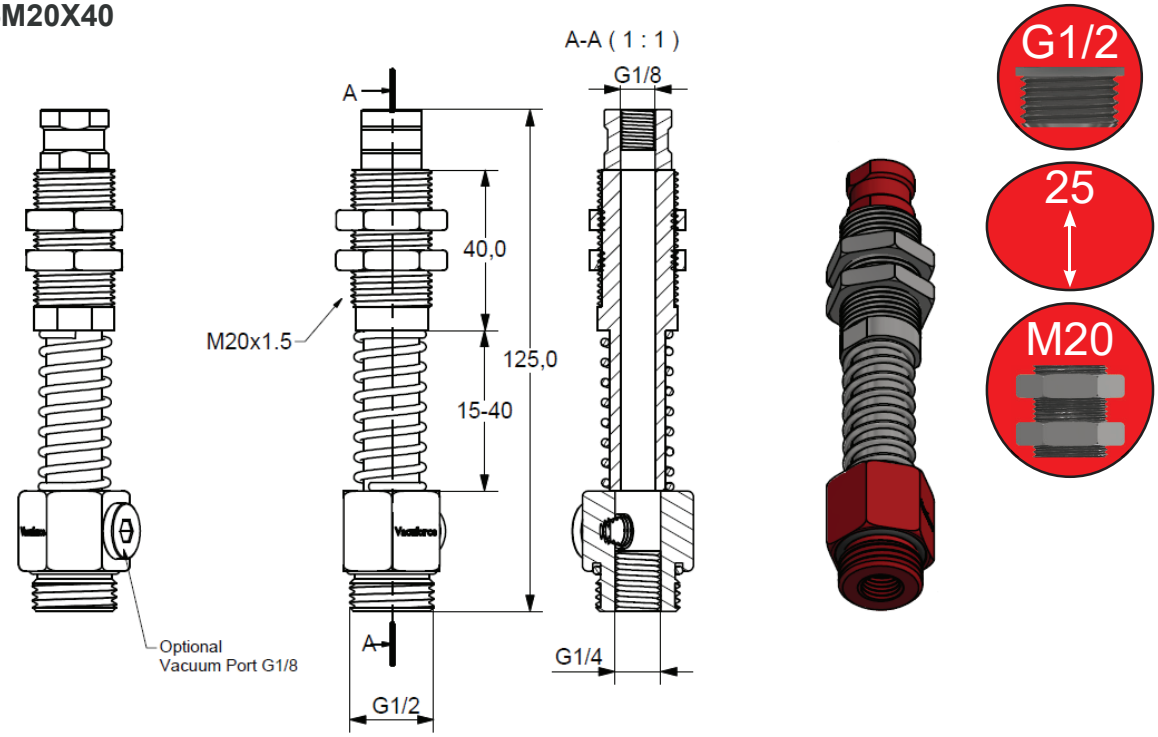

VFLCEX1250M20X60

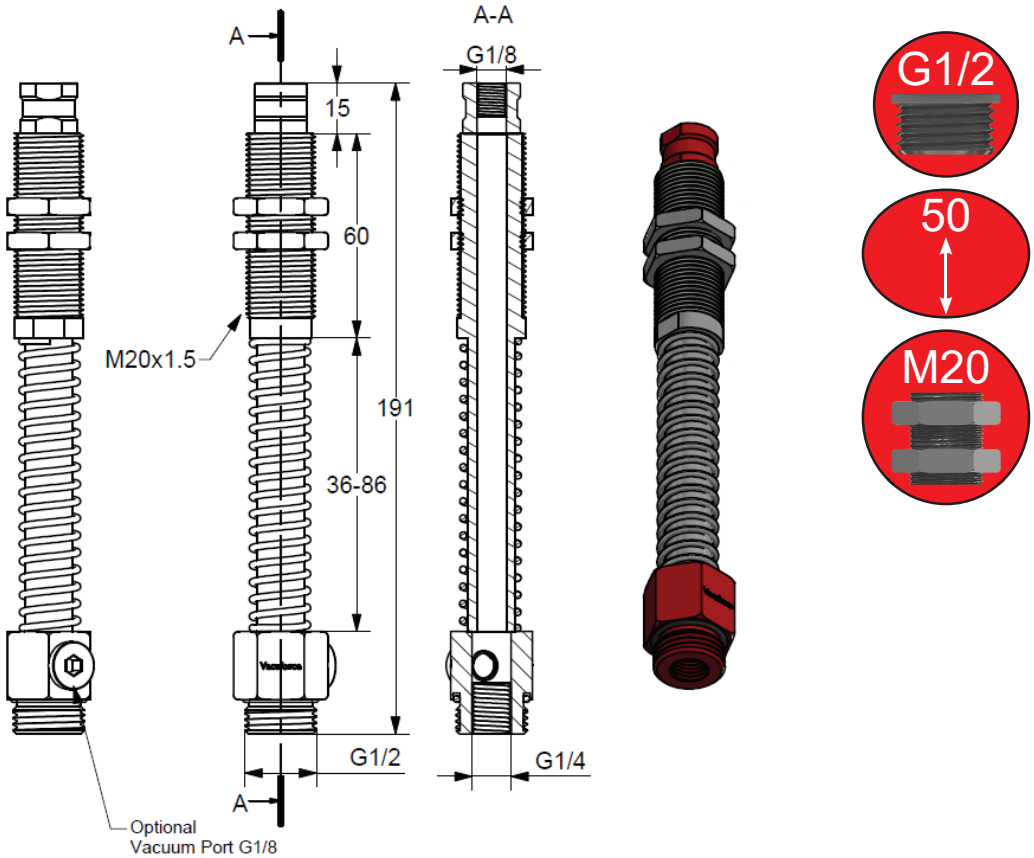

VFLCEX1275M20X80

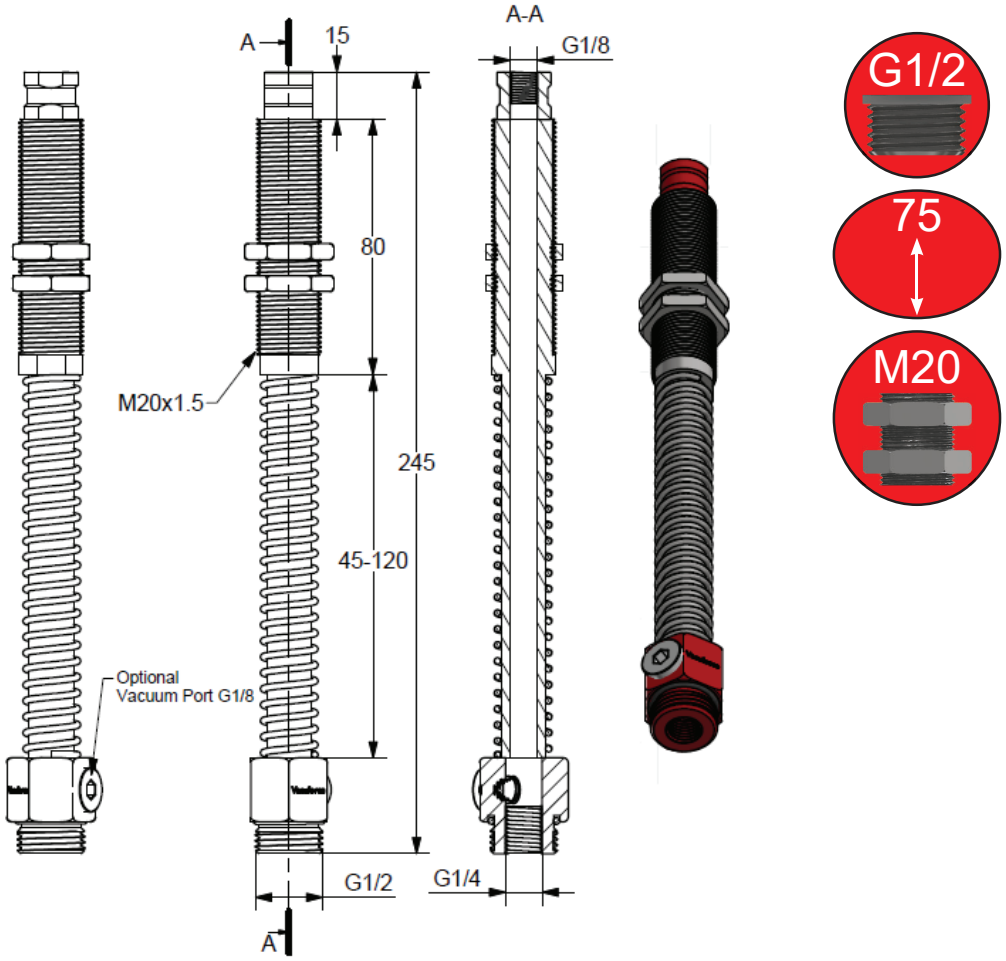

VACUFORCE®

NOTES