ASV Angle Seat Valves

- Stainless steel body
- Pneumatic pilot operation
- Normally closed and normally open models
- Single acting and double acting options
- Available in BSPP & NPT threads & Flange
- Port sizes up to 2 1/2”



G - **ASV** - **15** - **S** - **1** - **NC**

Connection Type	
G	BSPP
N	NPT
DN	Flange
BL	Bolt Flange

Model Series
ASV

Orifice (mm)
15
20
25
35
40
50
65

Body Material	
S	Stainless Steel

Actuation	
1	Single Acting
2	Double Acting

Type	
NC	Normally Closed
NO	Normally Open

SPECIFICATIONS

Orifice (mm)	Thread	Flow m³/hr / CFM	Max Working Pressure bar / psi	Min Operating Pressure bar / psi	Medium Temperature
15	1/2”	4.2 / 2.5	16 / 240	0.39 / 5.9	-10 to 180ºC 14 to 356ºF
20	3/4”	8 / 4.7	11 / 165		
25	1”	19 / 11.2		0.42 / 6.3	
35	1 1/4”	28 / 16.5	15 / 225	0.5 / 7.5	
40	1 1/2”	42 / 25	12.5 / 188	0.44 / 6.6	
50	2”	55 / 32.5	10 / 150	0.4 / 6	
65	2 1/2”	65 / 38.5			

INTERNAL STRUCTURE

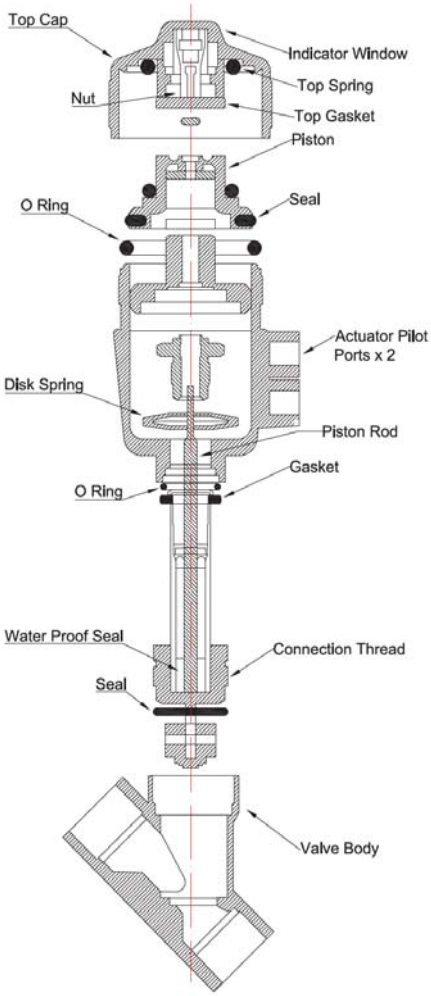

DIMENSIONS

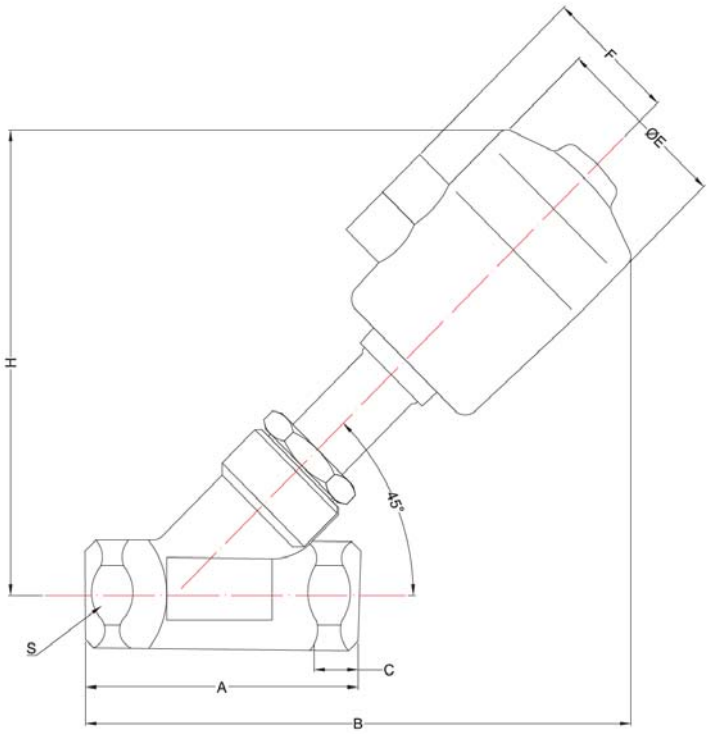

Orifice (mm)	Port D	A	B	C	ØE	F	H	S
15	1/2”	85	173	12	64	44	137	27
20	3/4”	95	178				145	32
25	1”	105	212	14	80	52	173	41
32	1 1/4”	118	236	16			189	55
40	1 1/2”	130	230	18				
50	2”	150	238	20	100		250	70
65	2 1/2”	155	300	25	125	62	265	80

BL FLANGE MODELS

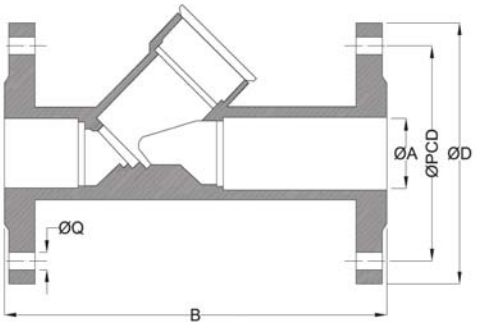

Orifice (mm)	ØA	B	ØD	PCD x 4	ØQ
15	19	130	95	65	14
20	25	150	105	75	
25	32	160	115	85	
32	38	180	135	100	18
40	45	200	145	110	
50	57	230	160	125	
65	68	290	182	145	

DN FLANGE MODELS

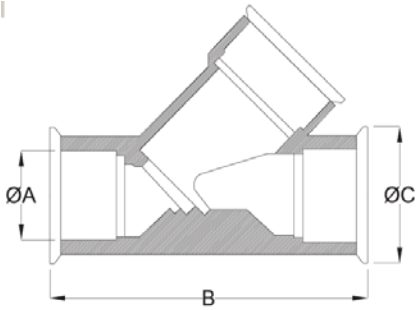

Orifice (mm)	ØA	B	ØC
15	19	120	50.50
20	25	130	
25	32	140	
32	38	150	
40	45	180	64
50	57	195	
65	68	230	77

See More Products, Check Pricing & Inventory Online
pneuforce.com