NOTICE TO INSTALLER: Instructions must remain with installation.

Your Peace of Mind is Our Top Priority®

FM1798
0417
Supersedes
0215

Product information presented here reflects conditions at time of publication. Consult factory regarding discrepancies or inconsistencies.

Register your Zoeller Pump Company Product on our website: http://reg.zoellerpumps.com/

ZOELLER®

PUMP COMPANY

Zoeller Family of Water Solutions™

MAIL TO: *P.O. BOX 16347 • Louisville, KY 40256-0347*
SHIP TO: *3649 Cane Run Road • Louisville, KY 40211-1961*
TEL: *(502) 778-2731 • 1 (800) 928-PUMP •* ***FAX:*** *(502) 774-3624*

visit our web site: www.zoeller.com

DESIGNED • MACHINED • ASSEMBLED IN THE USA

OWNER'S MANUAL

P/N 013558

600 SERIES SUBMERSIBLE NON-CLOG UNITS

Congratulations on the purchase of the Zoeller 600 Series submersible pump. Since 1939 the name Zoeller has represented the standard for submersible dewatering and sewage pumps. The same high quality workmanship and easy maintenance design has been incorporated into this line of heavy-duty solids-handling submersible sewage pumps. This Zoeller pump will provide years of trouble-free service when installed according to the manufacturers' recommendations.

This manual incorporates the installation, operation, maintenance, and service instructions into one document to aid in the ownership of a Zoeller submersible non-clog wastewater product. Please read and review this manual before installing the product. Follow the steps and procedures listed on FM0990 for a proper start-up. Many items contained within, when followed correctly, will not only ensure a long and problem-free life for the pump, but also save time and money during installation. Reference FM1799 for repair manual on 600 Series Pumps. Should further assistance be necessary please call our Product Support Department at 1-800-928-PUMP (7867).

Table of Contents

Safety Instructions **1**
Limited Warranty **2**
Performance Data **2**
Preinstallation Information **3**
Electrical Data **3**
Typical Dewatering Installation **4**
Typical Sewage Installation **4**
Pump Wiring Instructions **5-6**
Operation **6-7**
Maintenance **7**
Service Checklist **8**

Owner's Information

Model Number: _____ **Date Code:** _____

Serial Number: Pump 1_____ **Pump 2**_____

☐ **Simplex** ☐ **Panel P/N** _____

☐ **Duplex** ☐ **Rail System P/N** _____

Job Name: _____

Distributor: _____

Sales Order Number: _____

Contractor: _____

Date of Installation: _____

System Readings During Operation: Voltage _____ **Amps** _____

Safety Instructions

TO AVOID SERIOUS OR FATAL PERSONAL INJURY OR MAJOR PROPERTY DAMAGE, READ AND FOLLOW ALL SAFETY INSTRUCTIONS IN THIS MANUAL AND ON THE PUMP.

THIS MANUAL IS INTENDED TO ASSIST IN THE INSTALLATION AND OPERATION OF THIS UNIT AND MUST BE KEPT WITH THE PUMP.



This is a **SAFETY ALERT SYMBOL.** When you see this symbol on the pump or in the manual, look for one of the following signal words and be alert to the potential for personal injury or property damage.

⚠ DANGER — Warns of hazards that **WILL** cause serious personal injury, death or major property damage.

⚠ WARNING — Warns of hazards that **CAN** cause serious personal injury, death or major property damage.

⚠ CAUTION — Warns of hazards that **CAN** cause personal injury or property damage.

⚠ NOTICE — INDICATES SPECIAL INSTRUCTIONS WHICH ARE VERY IMPORTANT AND MUST BE FOLLOWED.

THOROUGHLY REVIEW ALL INSTRUCTIONS AND WARNINGS PRIOR TO PERFORMING ANY WORK ON THIS PUMP.

MAINTAIN ALL SAFETY DECALS.

REFER TO WARRANTY ON PAGE 2.

© Copyright 2017 Zoeller® Co. All rights reserved.

Limited Warranty

Manufacturer warrants, to the purchaser and subsequent owner during the warranty period, every new product to be free from defects in material and workmanship under normal use and service, when properly used and maintained, for a period of one year from date of purchase by the end user, or 18 months from date of original manufacture of the product, whichever comes first. Parts that fail within the warranty period, one year from date of purchase by the end user, or 18 months from the date of original manufacture of the product, whichever comes first, that inspections determine to be defective in material or workmanship, will be repaired, replaced or remanufactured at Manufacturer's option, provided however, that by so doing we will not be obligated to replace an entire assembly, the entire mechanism or the complete unit. No allowance will be made for shipping charges, damages, labor or other charges that may occur due to product failure, repair or replacement.

This warranty does not apply to and there shall be no warranty for any material or product that has been disassembled without prior approval of Manufacturer, subjected to misuse, misapplication, neglect, alteration, accident or act of nature; that has not been installed, operated or maintained in accordance with Manufacturer's installation instructions; that has been exposed to outside substances including but not limited to the following: sand, gravel, cement, mud, tar, hydrocarbons, hydrocarbon derivatives (oil, gasoline, solvents, etc.), or other abrasive or corrosive substances, wash towels or feminine sanitary products, etc. in all pumping applications. The warranty set out in the paragraph above is in lieu of all other warranties expressed or implied; and we do not authorize any representative or other person to assume for us any other liability in connection with our products.

Contact Manufacturer at, 3649 Cane Run Road, Louisville, Kentucky 40211, Attention: Customer Service Department to obtain any needed repair or replacement of part(s) or additional information pertaining to our warranty.

MANUFACTURER EXPRESSLY DISCLAIMS LIABILITY FOR SPECIAL, CONSEQUENTIAL OR INCIDENTAL DAMAGES OR BREACH OF EXPRESSED OR IMPLIED WARRANTY; AND ANY IMPLIED WARRANTY OF FITNESS FOR A PARTICULAR PURPOSE AND OF MERCHANTABILITY SHALL BE LIMITED TO THE DURATION OF THE EXPRESSED WARRANTY.

Some states do not allow limitations on the duration of an implied warranty, so the above limitation may not apply to you. Some states do not allow the exclusion or limitation of incidental or consequential damages, so the above limitation or exclusion may not apply to you.

This warranty gives you specific legal rights and you may also have other rights which vary from state to state.

Each Zoeller 600 Series Pump installation is required to have a completed Zoeller Pump Company Start-up Report (FM0990). The report is to be completed by an approved Start-up Technician in the presence of the installing contractor. A copy of this report will be on file at the Zoeller Pump Company offices in Louisville, KY. **Failure to comply with the requirement could void the warranty agreement.**

Performance Data

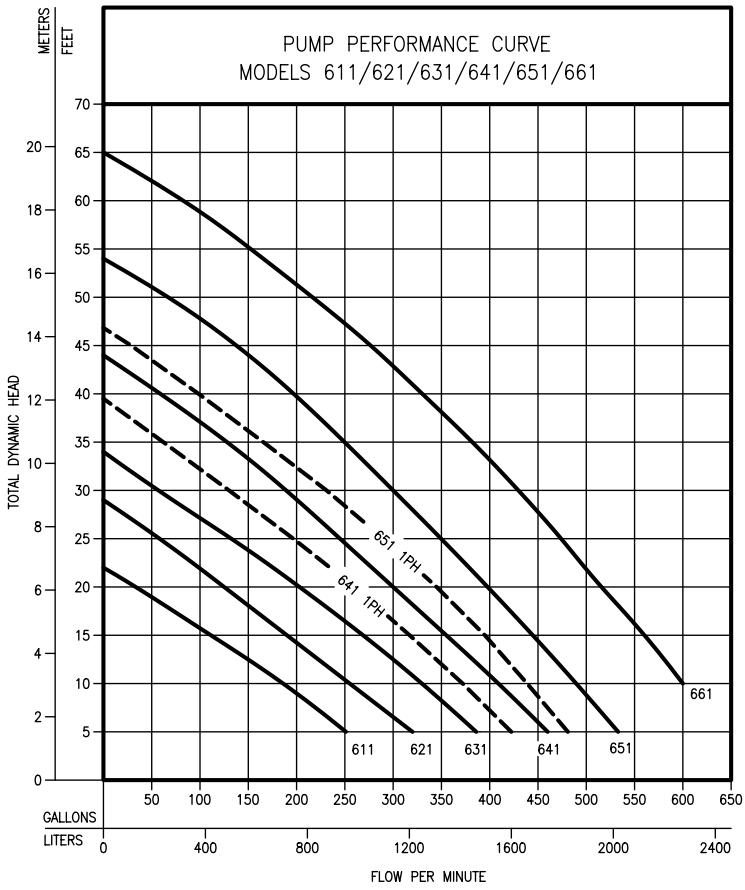

TOTAL DYNAMIC HEAD/FLOW
PER MINUTE
SEWAGE AND WASTEWATER

MODEL		611		621		631		641 (1PH)	
Feet	Meters	Gal.	Liters	Gal.	Liters	Gal.	Liters	Gal.	Liters
5	1.5	250	946	320	1211	390	1476	420	1590
10	3.0	185	700	255	965	335	1268	370	1401
15	4.6	110	416	190	719	272	1030	319	1208
20	6.1	35	132	125	473	200	757	260	984
25	7.6	--	--	60	227	130	492	198	750
30	9.1	--	--	--	--	55	208	130	492
35	10.7	--	--	--	--	--	--	62	235
40	12.2	--	--	--	--	--	--	--	--
45	13.7	--	--	--	--	--	--	--	--
50	15.2	--	--	--	--	--	--	--	--
55	16.7	--	--	--	--	--	--	--	--
60	18.2	--	--	--	--	--	--	--	--
Shut-off Head:		22 ft.(6.7m)		29 ft.(8.8m)		34 ft.(10.4m)		39.5 ft.(12.0m)	

MODEL		641		651 (1PH)		651		661	
Feet	Meters	Gal.	Liters	Gal.	Liters	Gal.	Liters	Gal.	Liters
5	1.5	460	1741	475	1798	533	2018	--	--
10	3.0	410	1552	440	1666	490	1855	600	2271
15	4.6	355	1344	395	1495	445	1685	560	2119
20	6.1	300	1136	345	1306	398	1507	515	1949
25	7.6	245	927	290	1098	350	1325	475	1798
30	9.1	190	719	232	878	300	1136	430	1627
35	10.7	130	492	165	625	250	946	380	1438
40	12.2	60	227	95	360	198	738	330	1249
45	13.7	--	--	25	95	140	530	275	1041
50	15.2	--	--	--	--	70	265	215	814
55	16.7	--	--	--	--	--	--	150	568
60	18.2	--	--	--	--	--	--	85	303
Shut-off Head:		44 ft.(13.4m)		46.5 ft.(14.2m)		54 ft.(16.5m)		65 ft.(19.8m)	

013859

© Copyright 2017 Zoeller® Co. All rights reserved.

Preinstallation Information

1. **Inspect your pump.** Occasionally, products are damaged during shipment. If the unit is damaged, contact your dealer before using. **DO NOT** remove the test plugs in the cover nor the motor housing.
2. **Carefully read the literature** provided to familiarize yourself with specific details regarding installation and use. These materials should be retained for future reference.



⚠ WARNING **SEE BELOW FOR LIST OF WARNINGS**

⚠ CAUTION **SEE BELOW FOR LIST OF CAUTIONS**

1. Do not lift, carry, or hang pump by the electrical cables. Damage to the electrical cables can cause shock, burns or death.

2. Make sure there is a properly grounded connection available. All pumps are furnished with provisions for proper grounding to help protect you against the possibility of electrical shock.

3. Make certain that the control box is within the reach of the pump's power supply cord. **DO NOT USE AN EXTENSION CORD.** Extension cords that are too long or too light do not deliver sufficient voltage to the pump motor. But, more important, they could present a safety hazard if the insulation were to become damaged or the connection end were to fall into the sump.

4. Make sure the pump electrical supply circuit is equipped with fuses and disconnect or circuit breakers of proper capacity. A separate branch circuit is recommended, sized according to the "National Electrical Code" for the current shown on the pump nameplate.

5. Care should be taken during the initial installation to be sure that adequate air supply is available whenever any person is in the basin. Always follow OSHA guidelines on confined space requirements.

6. Risk of electric shock - These pumps have not been investigated for use in swimming pool areas.

1. Check to be sure your power source is capable of handling the voltage requirements of the motor, as indicated on the pump nameplate.

2. The installation of pumps using auxiliary variable level float switches is the responsibility of the installing party and care should be taken that the tethered float switch will not hang up on the pump apparatus or pit peculiarities and is secured so that the pump will shut off. It is recommended that rigid piping and fittings be used and the pit be 36" (91.4 cm) or larger in diameter.

3. INFORMATION - VENT HOLE PURPOSE. It is necessary that all submersible pumps capable of handling various sizes of solid waste be of the bottom intake design to reduce clogging and seal failures. If a check valve is incorporated in the installation, a vent hole [approx. 3/16" (4 mm)] must be drilled in the discharge pipe below the check valve and pit cover to purge the unit of trapped air. Water stream will be visible from this hole during pump run periods. This vent hole should be checked periodically for clogging and cleaned as necessary. Trapped air is caused by agitation and/or a dry basin.

4. Water hammer creates momentary high pressure surges. These surges can cause severe damage to check valves and the piping system. Consideration for water hammer must be included in the piping system design. Reference ASPE Data Book, Chapter 2.33. Some systems may require external spring or lever weighted check valves or other engineered solutions.

5. Three phase pumps must be connected for proper rotation, which is counterclockwise looking into impeller inlet. See page 4 for instructions for checking 3 phase rotation.

NOTE: Pumps with the "UL" mark and pumps with the "US" mark are tested to UL Standard UL778. CSA Certified pumps are certified to CSA Standard C22.2 No. 108.

Electrical Data

Model	HP	Service Factor	RPM	Voltage	Phase	Hertz	Amps				KVA Code	Winding Resistance Line-to-Line
							Full Load	In Air	Shut Off	Locked Rotor		
E611	1	1.2	1750	230	1	60	6.9	4.1	4.7	48.0	M	2.5 / 4.8
J611	1	1.2	1750	200	3	60	4.8	3.3	3.7	32.0	M	2.2
F611	1	1.2	1750	230	3	60	4.2	2.2	2.6	28.0	M	3
G611	1	1.2	1750	460	3	60	2.1	1.1	1.3	14.0	M	12
BA611	1	1.2	1750	575	3	60	1.7	1.0	1.1	11.5	M	18
E621	1-1/2	1.2	1750	230	1	60	8.9	4.3	5.3	48.0	J	2.5 / 4.8
J621	1-1/2	1.2	1750	200	3	60	5.9	3.3	3.7	32.0	J	2.2
F621	1-1/2	1.2	1750	230	3	60	5.1	2.3	2.9	28.0	J	3
G621	1-1/2	1.2	1750	460	3	60	2.6	1.2	1.5	14.0	J	12
BA621	1-1/2	1.2	1750	575	3	60	2.0	1.0	1.3	11.5	J	18
E631	2	1.2	1750	230	1	60	14.5	7.2	8.0	86.0	L	0.94 / 3.8
J631	2	1.2	1750	200	3	60	7.8	4.5	5.0	46.0	J	1.5
F631	2	1.2	1750	230	3	60	6.8	2.3	4.4	41.0	K	2
G631	2	1.2	1750	460	3	60	3.4	1.2	2.2	20.5	K	8
BA631	2	1.2	1750	575	3	60	2.7	1.4	1.8	16.2	K	12
E641	3	1.2	1750	230	1	60	17.0	7.2	8.9	86.0	H	0.94 / 3.8
J641	3	1.2	1750	200	3	60	11.0	4.5	5.6	46.0	F	1.5
F641	3	1.2	1750	230	3	60	9.6	2.3	4.7	41.0	F	2
G641	3	1.2	1750	460	3	60	4.8	1.7	2.4	20.5	F	8
BA641	3	1.2	1750	575	3	60	3.9	1.4	2.0	16.2	F	12
E651	5	1.2	1750	230	1	60	28.0	16.1	19.7	139.0	H	0.9 / 3.1
J651	5	1.2	1750	200	3	60	17.5	6.1	7.6	64.0	D	1
F651	5	1.2	1750	230	3	60	15.2	6.1	7.4	58.0	E	1.3
G651	5	1.2	1750	460	3	60	7.6	3.1	3.7	29.0	E	5.2
BA651	5	1.2	1750	575	3	60	6.1	1.5	3.4	23.0	E	8
J661	7-1/2	1.0	1750	200	3	60	25.3	17.9	18.3	83.0	C	0.5
F661	7-1/2	1.0	1750	230	3	60	22.0	15.0	15.7	72.0	C	0.7
G661	7-1/2	1.0	1750	460	3	60	11.0	7.5	7.9	36.0	C	2.8
BA661	7-1/2	1.0	1750	575	3	60	9.0	5.3	5.8	29.0	C	5.4

*Consult Factory.

© Copyright 2017 Zoeller® Co. All rights reserved.

Typical Sewage/Waste Pumping System Installation

All installations must comply with all applicable electrical and plumbing codes, including, but not limited to, National Electrical Code, local, regional, and/or state plumbing codes, etc.

TYPICAL INDOOR FIBERGLASS BASIN

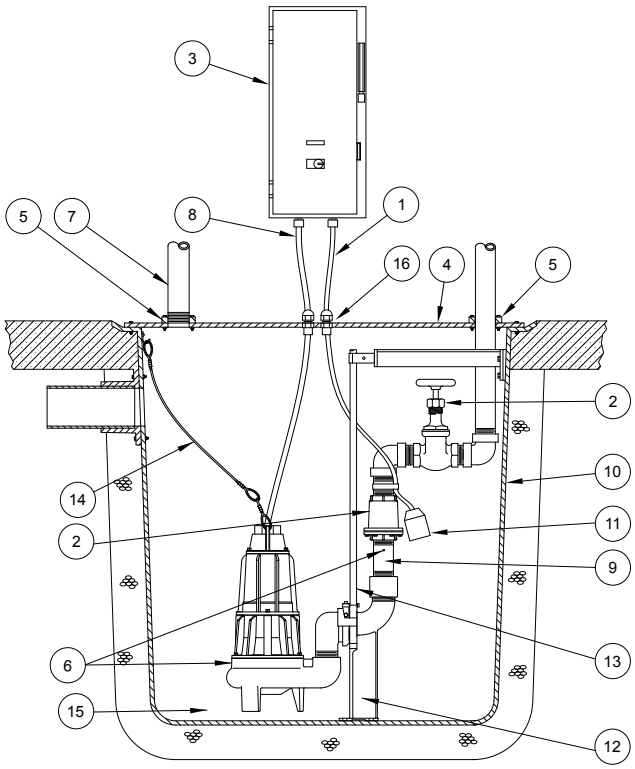

ZEPA0466

TYPICAL OUTDOOR CONCRETE BASIN WITH VALVE BOX AND HINGED ACCESS COVERS

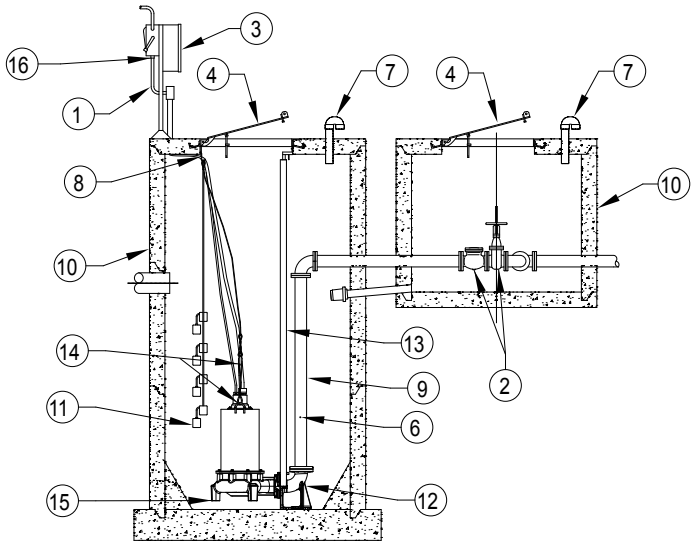

ZEPA0071

(1) Electrical wiring and protection **must** be in accordance with the National Electrical Code, and any other applicable state and local electrical requirements.

(2) Install proper full flow check and shut-off valve.

(3) Install proper controls. (Outdoor panels **require** NEMA 3R or 4X enclosure)

(4) All installations **require** a basin cover to prevent debris from falling into the basin and to prevent accidental injury.

(5) Gas tight seals are **required in all indoor sewage installations** to contain gases and odors.

(6) **When check valve is installed**, drill a 3/16" (4 mm) diameter hole in the discharge pipe below the check valve even with the top of the pump. NOTE: The hole must be below the basin cover and cleaned periodically. Water stream will be visible from this hole during pump run periods. Also a vent hole is drilled in the pump housing. Be sure that this hole is cleared during any servicing.

(7) Vent gases and odors to the atmosphere through vent pipe per Local and State codes.

(8) Secure power cord to avoid entanglement with variable level float switch mechanism.

(9) **Do not** reduce pump discharge pipe below 3" (76 mm) IPS size.

(10) Basin **must** be in accordance with all applicable codes and specifications. Basin must be sized to allow a minimum 3 minute lapse time between starts.

(11) Pump must be level and the tethered variable level float switch must be free and not hang up on pump or pit peculiarities.

(12) **If** a rail system is used, discharge elbow **must** be firmly anchored to the bottom of basin. In fiberglass basin, the bottom will need to be reinforced if the discharge elbow is used.

(13) **If** a rail system is used, the guide rails are 3/4" schedule 40 pipe for threaded vertical discharge units and 2" schedule 40 pipe for flanged horizontal discharge units. Brass, stainless steel or galvanized steel is recommended.

(14) Install ring and cable for lifting pump from pit.

(15) Basin must be clean and free of debris after installation.

(16) Cords must be properly sealed to prevent moisture and gases from entering the control panel.

© Copyright 2017 Zoeller® Co. All rights reserved.

Pump Wiring Instructions

⚠ WARNING Installation and checking of electrical circuits and hardware should be performed by a qualified licensed electrician.

⚠ WARNING **"Risk of electrical shock"** Do not remove power supply cord and strain relief or connect conduit directly to the pump.

⚠ CAUTION Power cords, sensor cords, and float cords all must be sealed to prevent gases from the basin entering the control panel.

INSTRUCTIONS FOR CHECKING ROTATION OF THREE PHASE UNITS

It is very important that these units be connected for proper rotation. Since no rotating parts are visible without removing the pump from the pit, the rotation on 3 phase units should be checked before installation into the pit as follows:

After the proper electrical connections are made, momentarily energize the pump observing the direction of kick back due to starting torque. The rotation is correct if the kick back is in the opposite direction of the rotation arrow. If the rotation is not correct, disconnect power and switch any two power leads. Turn power back on and retest for proper rotation.

DOUBLE SEAL PUMPS

(1) Double seal pumps offer extra motion protection from damage caused by seal failure.

(2) Pumps should be serviced on a periodic preventative maintenance schedule.

(3) Oil in the motor housing and lower seal cavity must be checked when pump is serviced. If oil from the motor housing contains water or other contaminations, both seals should be replaced during maintenance. Always replace with new factory recommended oil and service parts. All warranty repairs must be made by Zoeller Authorized Service Stations.

CONTROL PANELS

These pumps are nonautomatic. They require a control panel. A motor starter circuit, control circuit, and alarm circuit within the panel are standard features. Outdoor enclosures and alternating relays are often required. Variable level float switches are the most common level sensing device. The following should be noted.

(1) Single phase units have externally mounted capacitors and starting relays. Your control panel should have provisions for mounting these starting components.

(2) All pumps require overload protection in panel. Use with approved motor control that matches motor input in full load amperes with overload element(s) selected or adjusted in accordance with control instructions.

(3) Hazardous Location pumps require panels that offer intrinsically safe relays and all other NEC requirements must be followed (See Article 500,501 & 502 plus any others that apply.)

Three Phase Installation

Three phase pumps are nonautomatic. To operate automatically, a control panel is required. Follow the instructions provided with the panel to wire the system.

Before installing a pump, check the pump rotation to insure that wiring has been connected properly to power source, and that the green lead of power cord (See wiring diagram), is connected to a valid ground, Momentarily energize the pump, observing the directions of kick back due to starting torque. Rotation is correct if kick back is in the opposite direction of rotation arrow on the pump casing. If rotation is not correct, switching of any two power leads other than ground, should provide the proper rotation.

TYPICAL WIRING DIAGRAM

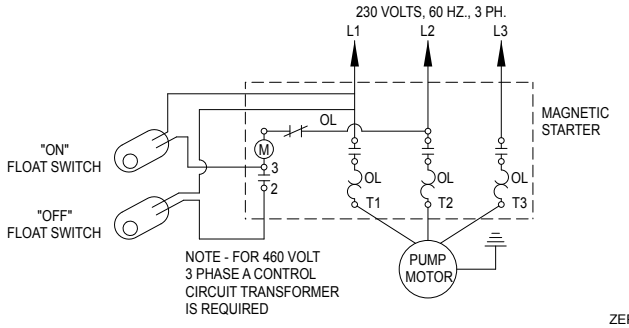

ZEPA0036

The above wiring diagram shows a typical hookup for a 230 volt, 3 phase pump, two variable level float switches, and a magnetic starter. It is not intended that this diagram cover all applications. See wiring diagram supplied with specific electrical controllers and panels.

TYPICAL 3-PHASE WIRING DIAGRAM

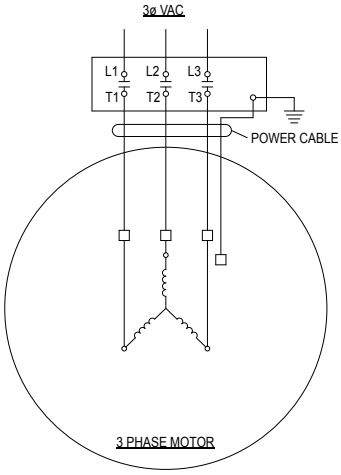

ZEPA0038F

"600 SERIES" FOUR CONDUCTOR AWG. POWER CORD SIZE						
MODEL	BHP	230/1PH	200/3PH	230/3PH	460/3PH	575/3PH
611	1	12 AWG.	12 AWG.	12 AWG.	12 AWG.	12 AWG.
621	1.5	12 AWG.	12 AWG.	12 AWG.	12 AWG.	12 AWG.
631	2	12 AWG.	12 AWG.	12 AWG.	12 AWG.	12 AWG.
641	3	12 AWG.	12 AWG.	12 AWG.	12 AWG.	12 AWG.
651	5	8 AWG.	12 AWG.	12 AWG.	12 AWG.	12 AWG.
661	7.5	N/A	8 AWG.	8 AWG.	12 AWG.	12 AWG.

Approximate cord diameter per gauge	
12/4 AWG.	.64"
8/4 AWG.	.93"

© Copyright 2017 Zoeller® Co. All rights reserved.

Single Phase Installation

All single phase models require start capacitor, run capacitor and relay in the circuit to start and operate properly. These components can be purchased separately or prewired in Zoeller control panel. For components purchased separately used the diagram for installation and hookup.
Single phase models are nonautomatic. To operate automatically a control panel must be added to the power circuit. Follow the instructions provided with the panel.

WIRING DIAGRAM

MODELS 611 / 621
USING SUPCO PR90
RELAY BEFORE 10/1/07

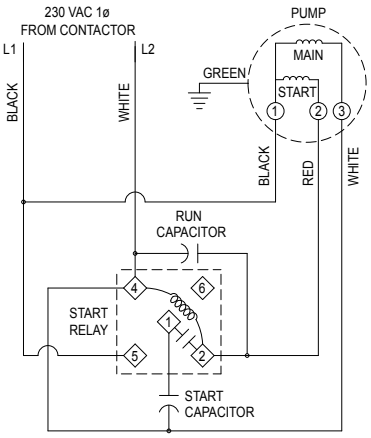

ZEPA0539

COMPONENT LAYOUT

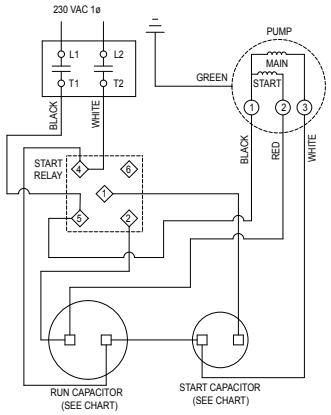

MODELS	START CAP.	RUN CAP.
611/621	324-389UF 125V	40UF 370V

ZEPA0477B

WIRING DIAGRAM

MODELS 631 / 641 / 651
AND 611 / 621 USING GE
RELAY AFTER 10/1/07

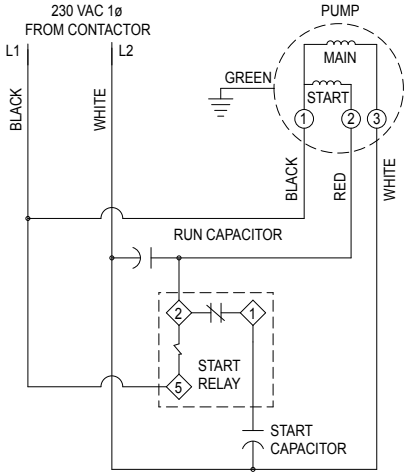

ZEPA0540

COMPONENT LAYOUT

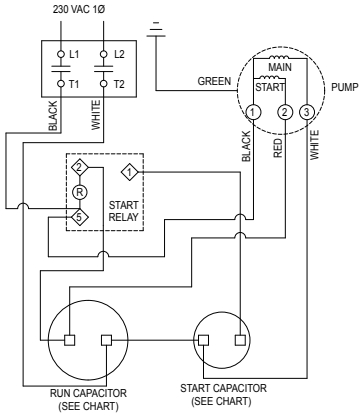

MODELS	START CAP.	RUN CAP.
6120/6121	216-259UF 250V	40UF 370V
6111/6122/6123/6124	270-324UF 250V	50UF 370V

ZEPA0537B

Operation

GENERAL
Zoeller pumps are lubricated and tested at the factory prior to shipment and require minimum pre-start-up maintenance.

Maximum continuous operating temperature of pump liquid for standard model pumps must not exceed 140 °F (40 °C). For longest service life all pumps should be totally submerged on long pumping cycles and a maximum of ½ hour run time per hour.

These units are not designed to handle liquids other than water or sewage. If pump is used in water contaminated with heavy, viscous, or abrasive materials, the warranty will be voided.

NAMEPLATE DATA
The nameplate, located on the top of pump, indicates specific information about the construction of the pump. The model number, date code, and serial number information should be recorded on the front page in the “Owner’s Information” section of this manual.

SHORT TERM STORAGE
If pump is to be stored, the following is advised:
- Store pump inside whenever possible or cover with some type of protective covering.
- Tape or seal in plastic bag the terminal ends of wire leads.
- Spray coat unpainted surfaces with rust inhibiting oil.
- The impeller should be rotated every six months in order to keep the seals lubricated and not develop a permanent set.

If panel is to be stored, the following is advised:

- Store the panel inside whenever possible and leave in the shipping box.
- All openings shall be sealed.
- Store in an upright position.
- Do not stack anything on top of panel.

START-UP PROCEDURE
Before placing the equipment into operation the following checked:

- Correct pump rotation (3 Phase units only).
- Clean pit.
- Panel dry and securely installed.
- Floats positioned properly.
- Discharge valves open.
- 3/16” (4 mm) vent hole drilled in pipe between check valve and pump.

(Continued on next page)

© Copyright 2017 Zoeller® Co. All rights reserved.

Operation *(continued)*

Once the above has been verified proceed with the following checks:

- Pump power cables properly connected to panel.
- Float cables properly connected to panel.
- Conduit connections to panel are properly sealed.
- Thermal overload adjustments made in the panel.
- After installing the pump into the containment area, with adequate submergence, open the discharge valve fully. Start the unit using manual controls. If flow is appreciably less than rated performance, pump may be air locked. To expel trapped air, jog the unit several times, using the manual controls.
- Have a qualified electrician take voltage and current measurements on the black wire of single phase or all three power wires of three phase with the pump running. Record these readings in the space provided in the **"Owner's Information"** section on page 1 of this manual for future reference.

After the preoperational functional test has been completed, system is ready for operation. Zoeller requires completing a Start-up Report (ZM1074) whenever a system is started for the first time or after a system has had a significant change take place (i.e. pump replacement, overhaul, etc..). A copy of the Start-up Report should remain with the system for future reference.

ADJUSTMENT PROCEDURE

Pumps: No adjustments are required other than assuring correct rotation.

Panels: The thermal overloads in the panel must be set to the F.L.A. rating on the pump nameplate (or refer to pump data sheet).

Floats: Refer to the system drawing for desired location of each float function.

Valves: Discharge valves should be placed in the fully open position. Systems should not be operated for extended periods of time with the discharge valves partially closed due to damaging the valve.

SHUTDOWN PROCEDURES

If a system is shutdown for more than six months, the following is recommended:

Pumps: If pit is to remain dry, then the pump can remain in the pit. With the pump in the pit, it should be operated for five minutes once every three months. If the pit is to remain wet, the pump should be removed and stored as noted above.

Panels: The panel should have all openings sealed to prevent moisture and dust from entering the enclosure. Prior to restarting system, the panel should be inspected for presence of moisture and any loose connections.

Valves: Consult the valve/actuator supplier for information concerning these systems components.

Maintenance

⚠ NOTICE Repair and service should be performed by a Zoeller Pump Company Authorized Service and Warrant Center only.

SAFETY PROCEDURES

⚠ WARNING For your protection, always disconnect pump and panel from its power source before handling.

⚠ WARNING Never enter the basin until it has been properly vented and tested. Any person entering a basin should be wearing a harness with safety rope extending to the surface so that they can be pulled out in case of asphyxiation. Sewage water gives off methane and hydrogen sulfide gases, both of which can be highly poisonous.

Installation and checking of electrical circuits and hardware should be performed by a qualified electrician.

Pump is never to be lifted by power cord.

⚠ WARNING Unit must be flushed and disinfected, inside and out, prior to servicing.

GENERAL SYSTEM INSPECTION

Before the system is placed into operation, a system Start-up Report should be conducted by a qualified technician.

⚠ WARNING Wiring and grounding must be in accordance with the national electrical code and all applicable local codes and ordinances.

LUBRICATION PROCEDURES

No lubrication is required.

If pumps are to be stored for more than six months, refer to short term storage procedure in the Operation section.

PREVENTIVE MAINTENANCE

Preventive maintenance is recommended to ensure a long service life from the product. Provided is a suggested maintenance schedule.

Every month:

- Check for proper and unobstructed float operation.
- Listen for proper check valve operation.
- Duplex Units - Check for even operating times. Uneven times indicate a defective unit, float switch or control.
- Inspect the panel for any presence of moisture in enclosure, loose connections, and general component condition. check out location and condition of float switches.

Every year:

- In addition to the monthly checks, the basin should be inspected and cleaned. Any defective components should be replaced. Inspect and remove any sand, debris, or mud present in the pump basin assembly.

Every two years:

- Check insulating oil in motor and seal chambers. Inspect oil for contaminations as follows:
- Clear oil, no burnt odor - Oil, motor and seals are in satisfactory condition.
- Dark oil, burnt odor - Pump motor has overheated. Check the motor winding resistance to ground. Ohm readings of 1 megohm or higher is required. If lower readings are present, return the unit to an Zoeller Authorized Service and Warranty Center for service.
- Milky, emulsified oil - Seals have failed. Unit must be returned to an authorized service facility for service.
- Dispose of the motor insulating oil properly if replacement is required.
- Inspect power cables for damage or wear. Replace immediately if damage or wear is detected.
- Inspect impeller for damage or wear. Replace as required by a Zoeller Authorized Service and Warranty Center.

DOUBLE SEAL PUMPS

- Double seal pumps offer extra protection from damage caused by seal failure.
- Oil in a motor housing and lower seal cavity must be checked when pump is serviced. If oil from the motor housing contains water or other contamination, both seals should be replaced during maintenance. Always replace with new factory recommended oil and service parts. All repairs must be made by Zoeller Authorized Service and Warranty Centers.

© Copyright 2017 Zoeller® Co. All rights reserved.

Service Checklist & Trouble Shooting



⚠ WARNING **ELECTRICAL PRECAUTIONS** Before servicing a pump, always shut off the main power breaker to the panel and then disconnect the pump - making sure you are wearing insulated protective sole shoes and are not standing in water. Under flooded conditions, contact your local electric company or a qualified licensed electrician for disconnecting electrical service prior to pump removal.

⚠ WARNING Submersible pumps contain oils which become pressurized and hot under operating conditions - **allow 2-1/2 hours after disconnecting before attempting service.**

CONDITION

A. Pump will not start or run.

Steps	Check Voltage At	If No Voltage	If Voltage
No. 1	Line terminals in pump's control panel L_1 - L_2 - L_3 (3 Phase)	Check Disconnect switch, line fuse, and/or circuit breakers in power supply circuit.	Proceed to No. 2
No. 2	Pump motor terminals in pump's control panel T_1 - T_2 - T_3	Check for control circuit voltage. Check out magnetic starter contacts, thermal overloads, and float switches	Check starting relay and capacitor (1 phase units). Check pump for ground, and binding impeller

COMMON CAUSES

B. Motor overheats and trips overload or blows fuse.

- Incorrect Voltage
- Unbalanced power source
- Incorrect motor rotation
- Negative or low head
- Excessive water temperature
- Impeller or seal mechanically bound
- Defective capacitor or relay
- Motor shorted
- Lost one line in a Three Phase unit

C. Pumps starts and stops too often.

- Check valve stuck open
- Level controls out of adjustment
- Thermal overload switch out of adjustment or defective
- Pit too small

D. Pump will not shut off.

- Debris under float switch
- Float travel obstructed
- Defective or damaged float switch
- Magnetic starter contacts shorted
- Air lock - check vent hole

E. Pump operates but delivers little or no water.

- Check for plugged Pump housing, discharge pipe or sticking check valve
- Vent hole clogged or not drilled
- Discharge head exceeds pumps capacity
- Low or incorrect voltage
- Incorrect motor rotation
- Defective capacitor

F. Drop in head and/or capacity after a period or use.

- Increase Pipe Friction
- Clogged line or check valve
- Abrasive material & chemical, deteriorated impeller and pump housing

If the above check list does not uncover the problem, consult the factory - Do not attempt to service or otherwise disassemble pump.

© Copyright 2017 Zoeller® Co. All rights reserved.