quality . service
innovation . integrity

Evaporative Cooling 370 Series



Features

The "Evaporative Cooling" series of submersible pumps is designed for continuous duty in poultry, residential or light commercial dewatering applications and can be used to transfer groundwater or effluent. Cast iron models include a powder coated epoxy finish to prevent corrosion and are designed to provide great heat dissipation from the motor. In addition to the oil-filled motor, the upper and lower bearings are permanently lubricated, ensuring a long service life. As with every Zoeller pump, each one is 100% pressure-tested, submerged and run to ensure quality and reliability for years of trouble-free performance! This attention to detail is an inherent feature of every pump in this series, making it one of the most dependable in the industry.

- Variable level control systems and containers of various sizes are available for longer cycles.
- Includes a stainless steel handle for easy installation and removal.
- All models are hermetically sealed to be watertight, dust-tight, and completely submersible.

Specifications

Motor Characteristics

Motor	0.56 - 0.72 kW
Voltage	220 V
Phase	1 Ph
Hertz	50 Hz
RPM	1300 or 2800 RPM
Type	Shaded pole, permanent split capacitor
Insulation	Class B
Amps	3.4 - 6.0 A

Pump Characteristics

Operation	Nonautomatic
Discharge Size	1-1/2" NPT (CE models with BSPT)
Solids Handling	12 mm (1/2"), 19 mm (3/4") spherical solids
Cord Length	8 m (25') standard
Cord Type	H07RN-F
Max Head	9.8 m (32')
Max Flow Rate	13.4 m3/hr (59.2 gpm)
Max Operating Temp	54 °C (130 °F)
Cooling	Oil filled
Motor Protection	Auto reset thermal overload

Materials Characteristics

Cap	Cast iron
Motor Housing	Cast iron
Pump Housing	Cast iron
Base	Engineered thermoplastic
Upper Bearing	Sleeve bearing
Lower Bearing	Sleeve or ball bearing
Mechanical Seals	Silicon carbide / carbon
Impeller Type	Non-clogging vortex
Impeller	Engineered thermoplastic
Hardware	Stainless steel
Motor Shaft	AISI 1215 steel
Gasket	Neoprene

50 Hz

ZOELLER® PUMP COMPANY
Zoeller Family of Water Solutions™

Evaporative Cooling 370 Series

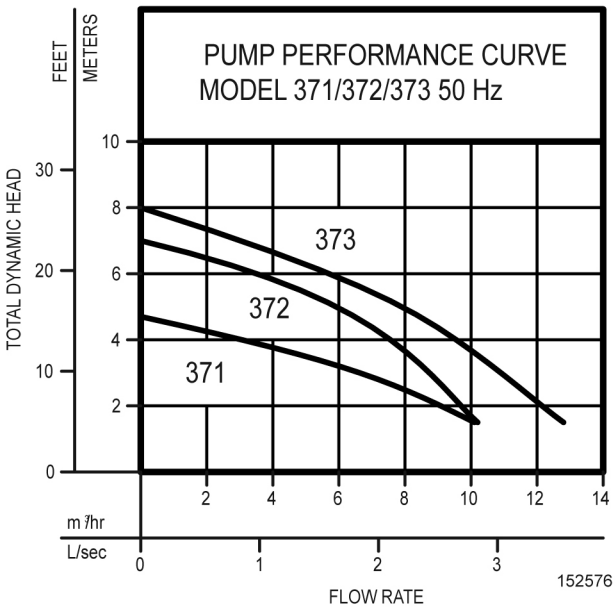

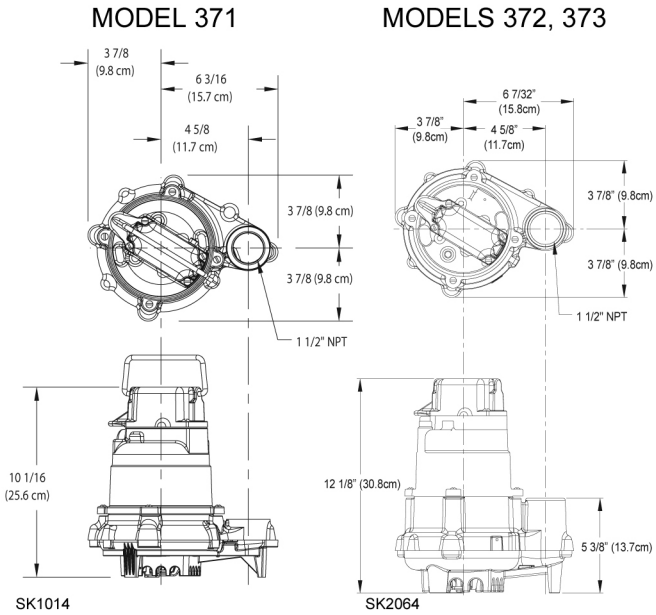

Model

Model Number	Seal	Mode	Volts	Phase	Amps	KW (p1)	Hz	Kg	Lbs
V371	Single	Non	220	1	5.2	0.72	50	10	21
V372	Single	Non	220	1	2.6	0.46	50	15	32
V373	Single	Non	220	1	3.6	0.56	50	17	37

Power cords less than 10 m (33') on CE models are intended for indoor use only.
All models are available with a type E/F (5 or 10 m), G (2 or 10 m) or I (5 m) plug.
Optional pump stand (P/N 10-2421). The stand, made of durable, non-corrosive ABS, attaches securely to the pump and is intended to reduce clogging by debris, eliminate the need for bricks or blocks under the pump, and provide the ability to raise the intake by adding sections of DN40 or DN50 (1-1/2" or 2") PVC.
Reserve Powered Design: For unusual conditions, a reserve safety factor is engineered into the design of every pump.

Your Peace of Mind is Our Top Priority®
3649 Cane Run Rd | Louisville, KY 40211 USA
+1 502-778-2731 | 1-800-928-7867 | Fax: +1 502-774-3624
www.zoeller.com

Product information presented here reflects conditions at time of publication. Consult factory regarding discrepancies or inconsistencies. Copyright Zoeller Company. All rights reserved.