VS FOAM SEAL CUPS

The EPDM foam vacuum cups are developed for handling very rough or coarse products such as concrete, rough sawn wood, marble and granite etc. These cups are sold as two separate parts.

1. Anodized Aluminum Support
2. Foam Seal

The foam is able to deform to the profile of the product being handled and offer a virtually air tight seal to enable safe lift and transfer. A mounting port is central to the support. This thread is suitable for either 1/2NPT or G1/2 studding.

If a separate vacuum port is required, the offset G1/4 port can be used. This port is used for either a venturi or vacuum gauge connection.

The cup fitting and seal should be ordered seperately

Cup Fitting Only	Seal Only
VFCF150MMF	VS150-E







Fitting and Cup Seal Assembled





DIMENSIONS (mm)

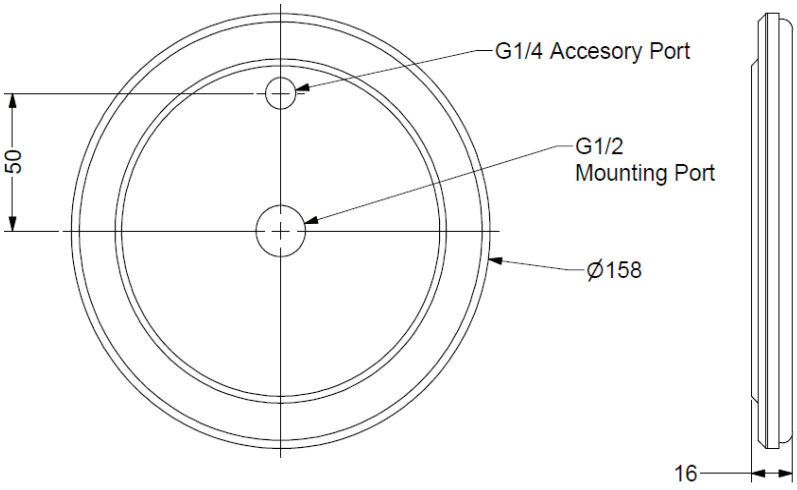

LEVEL COMPENSATORS

Refer to page 1.32 for suitable NON-ROTATING level compensators for this vacuum cup range.

