PRESSURE REDUCING VALVE WITH SURGE CONTROL FEATURE

06/08

MUSTANG SERIES

M6115-7 (Globe)
M61115-7 (Angle)

Schematic

- Throttles to reduce high upstream pressure to constant lower downstream pressure
- Closes quickly when downstream pressure exceeds reduced pressure setpoint
- Ideal for use when high capacity on-off equipment is installed downstream
- Reducing and Surge Control setpoints are separately adjustable

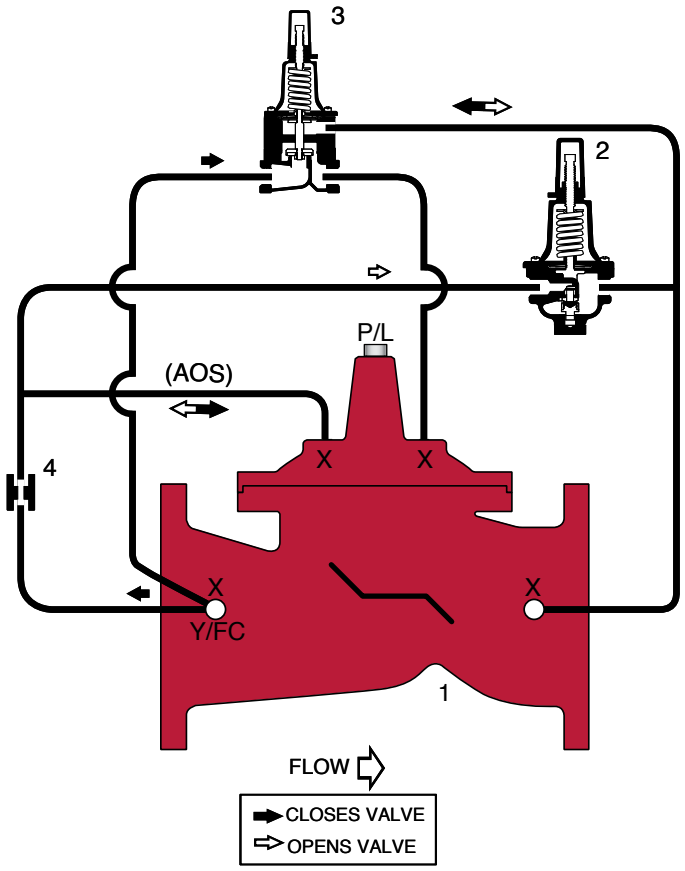

Standard Components

1 – Main Valve (Single Chamber)
2 – Pressure Reducing Control
3 – Downstream Surge Control
4 – Fixed Orifice

Options & Accessories

- ○ X – Isolation Cocks (2)
- ○ FC – Flo-Clean Strainer (1)
- ○ Y – Y-Strainer (Replaces Flo-Clean) (2)
- ○ ACS – Adjustable Closing Speed (3) (Replaces Fixed Orifice)
- ○ AOS – Adjustable Opening Speed (1)
- ○ P – Position Indicator (3)
- ○ L – Limit Switch (3)

(1) Standard 3" & Smaller
(2) Standard 4" & Larger
(3) Optional All Sizes

Operations

The Watts ACV Combination Pressure Reducing and Surge Control Valve is designed to automatically reduce a fluctuating higher upstream pressure to a constant lower downstream pressure, and will quickly modulate toward a closed position if downstream pressure suddenly becomes greater than the desired regulated setpoint. The quick closing action prevents possible damaging high inlet pressure from passing through the valve to downstream piping. Normal regulating action is controlled by a normally open, pressure reducing pilot designed to: 1) Open (allowing fluid out of the main valve cover chamber) when downstream pressure is below the adjustable setpoint, and 2) Close (allowing fluid to fill the main valve cover chamber) when downstream pressure is above the adjustable setpoint. A decrease in downstream pressure causes the valve to modulate toward an open position, raising downstream pressure. An increase in downstream pressure causes the valve to modulate toward a closed position, lowering downstream pressure.

If downstream pressure suddenly becomes greater than the desired regulated setpoint, the normally closed surge control pilot opens and rapidly admits higher inlet pressure into the valve cover, increasing rate of valve closure. Normal pressure reducing operation resumes when downstream pressure decreases below the desired regulated setpoint.

Materials

Body & Cover:	Ductile Iron ASTM A536
Coating:	NSF Listed Fusion Bonded Epoxy Lined and Coated
Trim:	316 Stainless Steel
Elastomers:	Buna-N (standard) EPDM Viton
Stem, Nut & Spring:	Stainless Steel

Globe

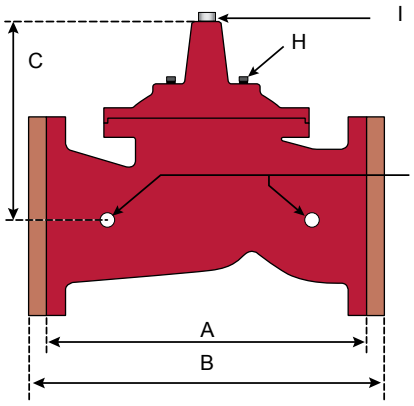

Angle

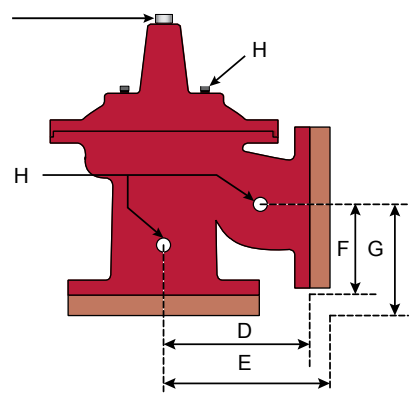

Operating Pressure

Threaded = 400 psi
150 Flanged = 250 psi
300 Flanged = 400 psi

Operating Temperature

Buna-N: 160°F Maximum
EPDM: 300°F Maximum
Viton: 250°F Maximum

Pilot System

Reducing Control
30-300 psi (Standard)
0-30 psi (Optional)
Surge Control
20-200 psi (Standard)
0-30 psi (Optional)

Tubing & Fittings

Copper / Brass (Standard)
Stainless Steel (Optional)

Dimensions

	A	B	C	D	E	F	G	H	I	
VALVE SIZE	GLOBE 150#	GLOBE 300#	COVER TO CENTER	ANGLE 150#	ANGLE 300#	ANGLE 150#	ANGLE 300#	PORT SIZE	PORT SIZE	SHIPPING WEIGHTS*
3	10-1/4	11	7	-	-	-	-	3/8	1/2	21
4	13-7/8	14-1/2	8-5/8	6-15/16	7-1/4	5-1/2	5-13/16	1/2	1/2	39
6	17-3/4	18-5/8	11-5/8	8-7/8	9-3/8	6-3/4	7-1/4	3/4	3/4	89
8	21-3/8	22-3/8	15	10-11/16	11-3/16	7-1/4	7-3/4	3/4	3/4	150
10	26	27-3/8	17-7/8	-	-	-	-	1	1	283

For larger sizes consult factory

Valve Cover Chamber Capacity

Valve Size (in)	3	4	6	8	10
fl.oz.	4	10	22	70	-
U.S. Gal	-	-	-	-	1-1/4

Valve Travel

Valve Size (in)	3	4	6	8	10
(in)	1/2	3/4	1	1-1/2	2

Sizing

Size (in)	3	4	6	8	10
Maximum Continuous (GPM)	260	580	1025	2300	4100
Minimum Continuous (GPM)	1	30	50	115	200

Maximum continuous flow based on velocity of 20 ft. per second.
Minimum continuous flow based on velocity of 1 ft. per second.

NOTE: The above chart is a suggested guide. Inlet pressure, outlet pressure, minumum, normal and maximum flow rates should be considered for specific valve sizing. Contact Watts ACV for details.

Cavitation Chart

After selecting the valve size, locate inlet and outlet pressures on this chart. If the intersection point falls in the shaded area, cavitation can occur. Operation of valves continually in the cavitation zone should be avoided. Consult Watts ACV for alternatives.

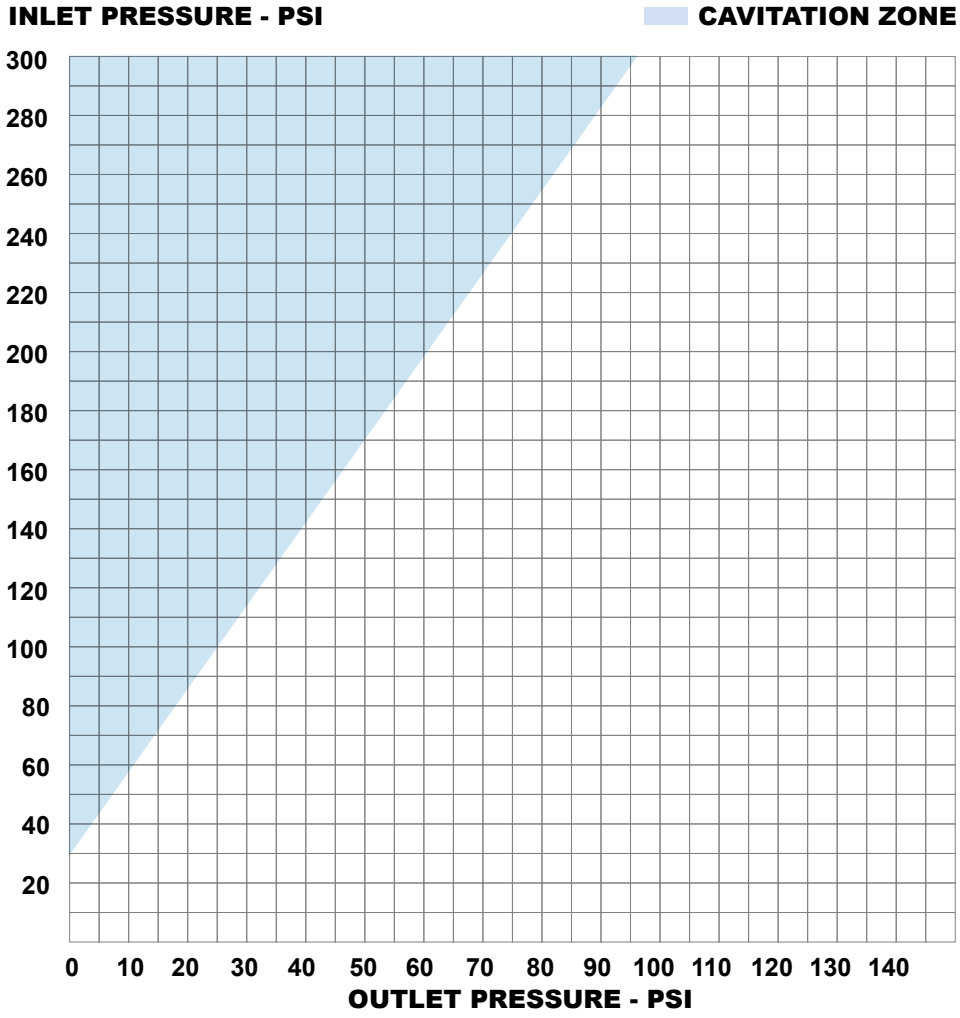

Cross-Sectional Detail

Main Valve

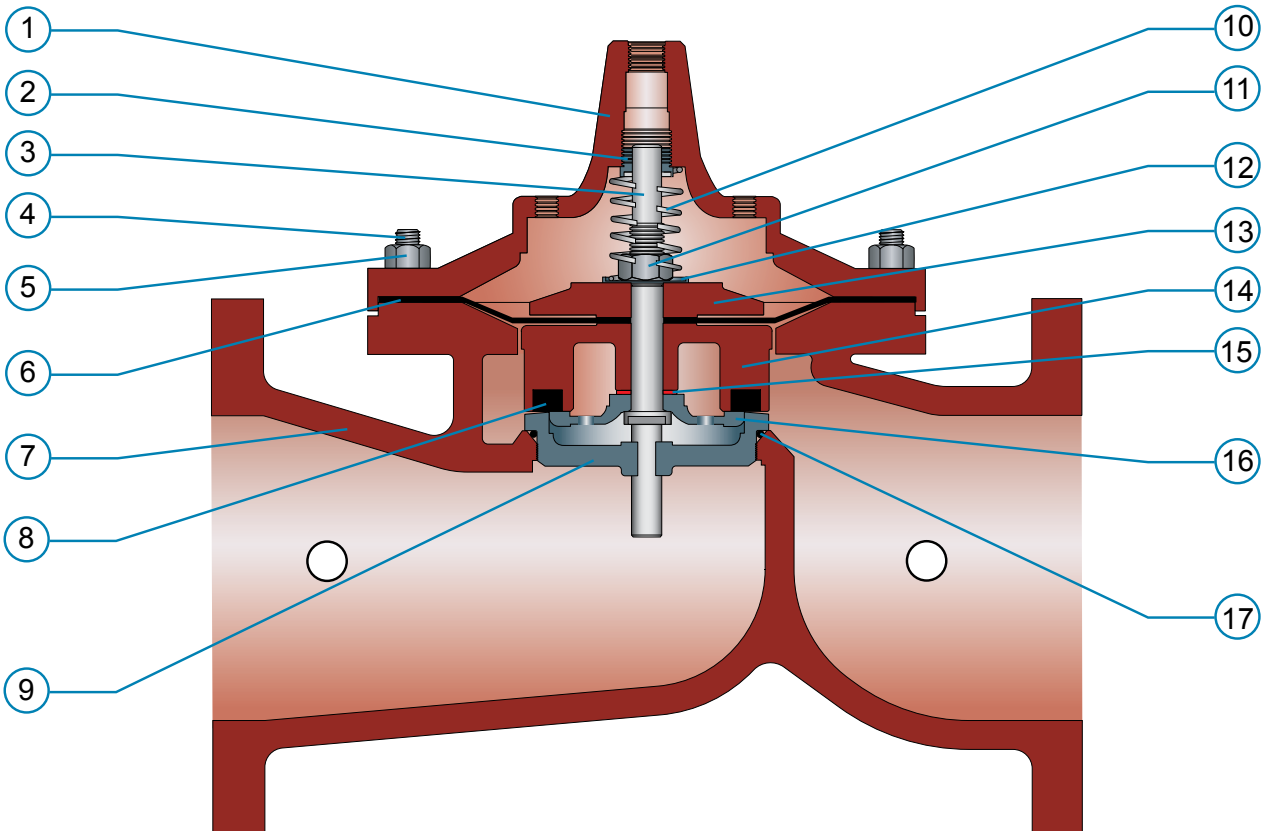

ITEM	DESCRIPTION	MATERIAL
1	Cover	ASTM A536 65-45-12 Epoxy Coated Ductile Iron
2	Cover Bearing	ASTM A276 304 Stainless Steel
3	Shaft / Stem	ASTM A276 304 Stainless Steel
4	Stud	ASTM A570 Gr.33 Zinc Plated Steel
5	Cover Nut	ASTM A570 Gr.33 Zinc Plated Steel
6	**Diaphragm***	Buna-N (Nitrile)
7	Body	ASTM A536 65-45-12 Epoxy Coated Ductile Iron
8	**Seat Disc***	Buna-N (Nitrile)
9	Seat Ring	ASTM A743 CF8M (316) Stainless Steel
10	Spring	ASTM A276 302 Stainless Steel
11	Stem Nut	ASTM A276 304 Stainless Steel
12	Spring Washer	ASTM A276 304 Stainless Steel
13	Diaphragm Washer	ASTM A536 65-45-12 Epoxy Coated Ductile Iron
14	Disc Retainer	ASTM A536 65-45-12 Epoxy Coated Ductile Iron
15	**Spacer Washer***	Fiber*
16	Disc Guide	ASTM A743 CF8M (316) Stainless Steel
17	**Seat Gasket***	Buna-N (Nitrile)

** Contained in Main Valve Repair Kit*

Controls and Accessories

Model CP-15

Pressure Reducing Pilot

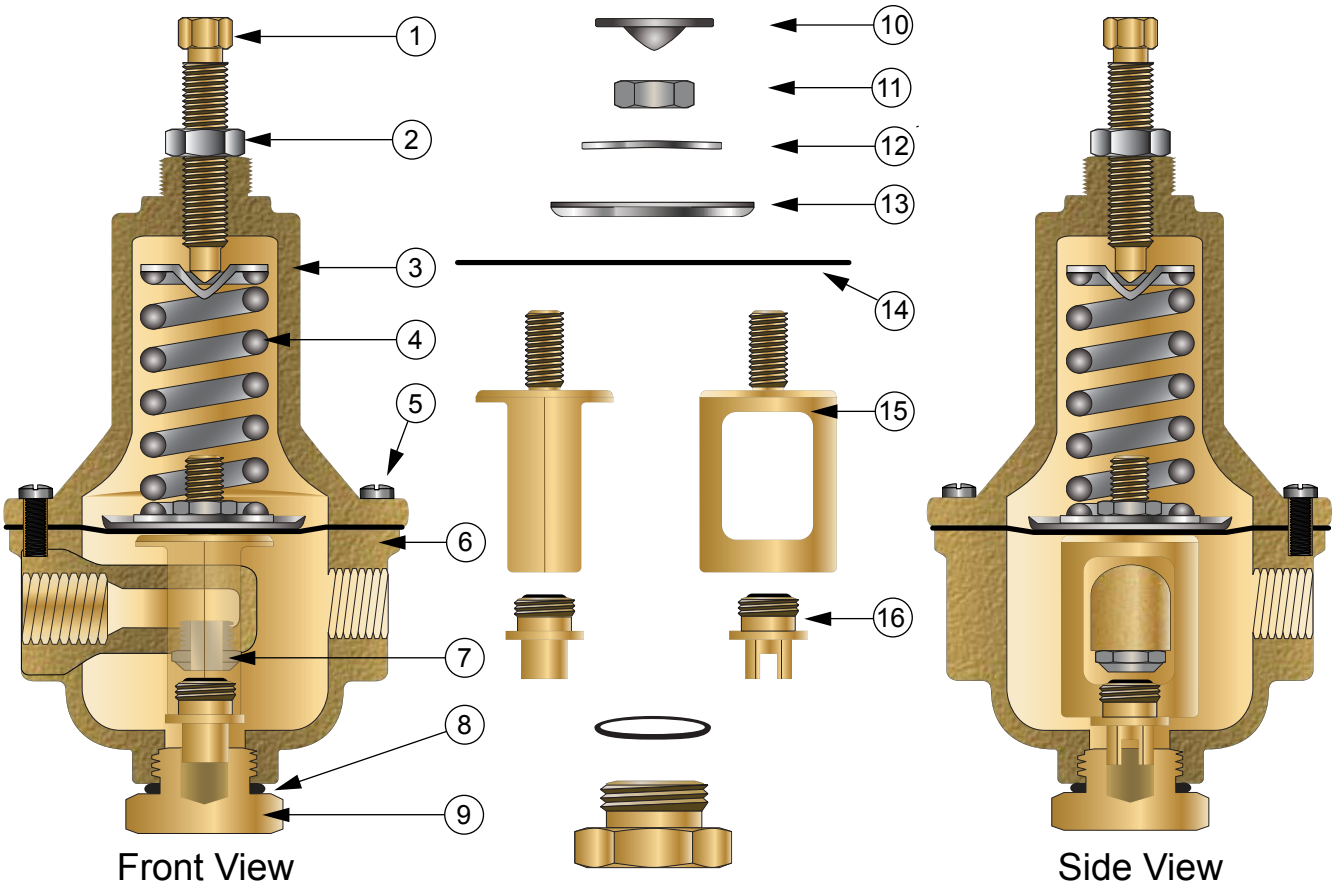

ITEM NUMBER	DESCRIPTION
1	Adjusting Screw
2	Jam Nut
3	Spring Housing
4	Spring
5	Cap Screw
6	Body
7	Seat
8	O-Ring*
9	Bottom Cap
10	Spring Guide

ITEM NUMBER	DESCRIPTION
11	Nut
12	Belleville Washer
13	Diaphragm Washer
14	Diaphragm *
15	Yoke
16	Disc and Retainer Assembly*

** Included in Repair Kit*

Controls and Accessories

Model CP-16

Downstream Surge Control

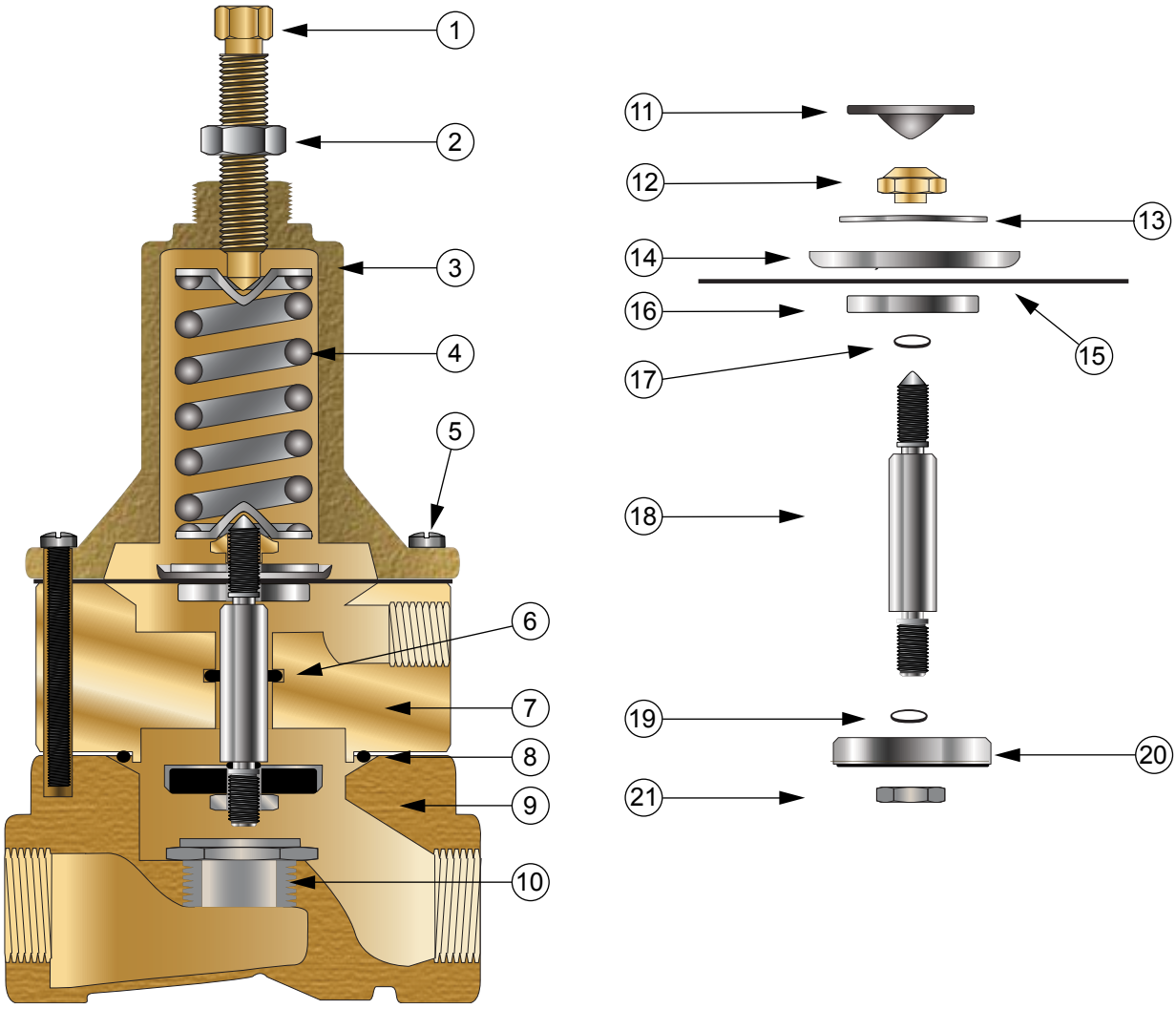

ITEM NUMBER	DESCRIPTION
1	Adjusting Screw
2	Jam Nut
3	Spring Housing
4	Spring
5	Cap Screw
6	Shaft O-Ring*
7	Power Chamber
8	O-Ring *
9	Body
10	Seat
11	Spring Guide

ITEM NUMBER	DESCRIPTION
12	Upper Stem Nut
13	Belleville Washer
14	Upper Diaphragm Washer
15	Diaphragm *
16	Lower Diaphragm Washer
17	O-Ring *
18	Stem
19	O-Ring *
20	Disc and Retainer Assembly *
21	Lower Stem Nut

** Included in Repair Kit*

Installations

- Prior to installation, flush line to remove debris.
- Install valve horizontally “in line” (cover facing UP), so flow arrow matches flow through the line. **Avoid installing valves 6” and larger vertically.** Consult factory **prior** to ordering if installation is other than described.
- Install inlet and outlet isolation valves. **NOTE:** When using butterfly valves, insure disc does not contact control valve. Damage or improper valve seating may occur.
- Provide adequate clearance for valve servicing and maintenance.
- Install pressure gauges to monitor valve inlet and outlet pressure.
- If installation is subjected to very low flow or potentially static conditions, it is recommended a pressure relief valve (1/2” minimum) be installed downstream of the Pressure Reducing Valve for additional system protection.

Start-Up

Proper Automatic Control Valve start-up requires bringing the valve into service in a controlled manner. All adjustments to control pilots and speed controls, if so equipped, should be made slowly, allowing the valve to respond and the system to stabilize. **NOTE: Control Valves should be set-up in a dynamic (flowing) condition for proper start-up. Provisions for flow must be made to insure proper settings.**

- For proper operation, the Surge Control Pilot is adjusted approximately 10 PSI **higher** than the Pressure Reducing Control.

1. Close upstream and downstream valves to isolate the valve from line pressure. Release spring tension on Pressure Reducing Control by turning adjustment screw out (counterclockwise), decreasing setpoint. Increase spring tension on Surge Control Pilot by turning adjustment screw in (clockwise) to keep Surge Control Pilot closed while downstream pressure adjustments are made. Open all Isolation Ball Valves, if so equipped. If valve is fitted with adjustable speed controls, turn needle(s) in (clockwise) until seated, and return out (counterclockwise) 1-1/2 to 2-1/2 turns. These are approximate settings, and should be fine tuned to suit system requirements after pressure adjustments have been made.

2. Slowly open upstream isolation valve to allow controlled filling of the valve. Vent entrapped air by carefully loosening control tubing or pipe plug at the highest point possible. If valve is equipped with a Position Indicator, open Air Bleed Petcock to vent air. Water will be milky in appearance and will begin to clear as air is vented. Carefully loosen enough cover screws on control pilot(s) to vent entrapped air. Re-tighten when water vents clearly.

3. **Setting Reducing Control:** Slowly open downstream isolation valve. Gradually turn adjustment screw on the Pressure Reducing Control in (clockwise) to raise downstream pressure. Allow valve and system to stabilize. Observe inlet and outlet pressure gauges. Continue to adjust as needed, pausing approximately every 1-1/2 turns, allowing valve and system to stabilize. Turning adjustment screw clockwise raises outlet pressure. Turning adjustment screw counterclockwise lowers outlet pressure. Continue to adjust until downstream pressure is approximately 10 PSI **higher** than desired outlet pressure.

4. **Setting Surge Control:** While observing downstream pressure gauge (or Position Indicator), slowly turn Surge Control Pilot adjustment screw out (counterclockwise) until downstream pressure quickly falls. The Surge Control Pilot is set at the point when the valve begins to close. Tighten locknut on the Surge Control Pilot. Turn adjustment screw counterclockwise on Pressure Reducing Control until desired downstream pressure is achieved. Tighten locknut on Pressure Reducing Pilot. The Surge Control Pilot is set approximately 10 PSI higher than the Pressure Reducing Control.

5. Fine tune Speed Controls to suit system requirements. Adjust Closing Speed Control (if equipped) clockwise for slower closure, and counterclockwise for faster closure. Adjust Opening Speed Control (if equipped) clockwise for slower opening, and counterclockwise for faster opening.

Specifications

The Pressure Reducing and Downstream Surge Control Valve shall be a pilot operated diaphragm valve designed to automatically reduce a fluctuating higher upstream pressure to a constant lower downstream pressure regardless of varying flow rate, and quickly modulate toward a closed position when a sudden high pressure downstream condition occurs.

The main valve shall be a hydraulically operated, single diaphragm actuated, globe or angle pattern valve. Y-pattern valves shall not be permitted. The valve shall contain a disc and diaphragm assembly that forms a sealed chamber below the valve cover, separating operating pressure from line pressure. The diaphragm shall be constructed of nylon reinforced Buna-N, and shall not seal directly against the valve seat and shall be fully supported by the valve body and cover. Rolling diaphragm construction will not be allowed and there shall be no pistons operating the main valve or any pilot controls.

The main valve body and cover shall be Ductile Iron ASTM A536, and all internal cast components shall be Ductile Iron or CF8M (316) Stainless Steel. All Ductile Iron components, including the body and cover, shall be lined and coated with an NSF 61 Certified Epoxy Coating applied by the electrostatic heat fusion process. All main valve trim and throttling components (cover bearing, valve seat and disc guide) shall be Stainless Steel. The valve body and cover must be machined with a 360-degree locating lip to assure proper alignment.

The disc and diaphragm assembly shall contain a Buna-N synthetic rubber disc with a rectangular cross-section that is securely retained on 3-1/2 sides by a disc retainer and disc guide. Diaphragm assemblies utilizing bolts or cap screws for component retention will not be permitted.

The exposed portion of the seat disc shall contact the valve seat and seal drip-tight. The disc and diaphragm assembly must be guided by two separate bearings, one installed in the valve cover and one concentrically located within the valve seat, to avoid deflection and assure positive disc-to-seat contact. Center guided valves will not be permitted. All necessary repairs shall be made from the top of the valve while the body remains in line.

Pilot control systems for 3” valves shall contain a Flow Clean Strainer, Fixed Orifice Closing Speed, Adjustable Opening Speed Control, Downstream Surge Control Pilot and Pressure Reducing Pilot. Pilot control systems for valves 4” and larger shall contain an external Y-Strainer, Fixed Orifice Closing Speed, Downstream Surge Control Pilot, Pressure Reducing Pilot and Isolation Ball Valves on all body connections. All pilot control systems shall utilize copper tubing and brass fittings regardless of valve size. The adjustment range of the surge control pilot shall be 20-200 psi and the pressure reducing pilot shall be 30-300 psi.

The valve shall be Watts ACV Model M6115-7 (Globe) or M61115-7 (Angle) pattern Combination Pressure Reducing and Surge Control Valve.

Other Watts ACV Pressure Reducing Control Valves

M6115 / M61115	Pressure Reducing Valve
M6115-3 / M61115-3	Pressure Reducing Valve with Hydraulic Check Feature
M6115-74 / M61115-74	Pressure Reducing Valve with Low Flow By-Pass