For Health Hazard Applications

Job Name _____	Contractor _____
Job Location _____	Approval _____
Engineer _____	Contractor's P.O. No. _____
Approval _____	Representative _____

Series 288A

Hot or Cold Water Anti-Siphon Vacuum Breakers

Sizes: ¼" - 3" (8-80mm)

Series 288A represents a complete line of vacuum breakers designed to prevent backsiphonage of contaminated water into a potable water supply.

They feature a lightweight, durable "disc float" suitable for temperatures up to 180°F (82°C) which closes the atmospheric vent to prevent spilling under all rates of flow. Therefore, they are ideally recommended for low flow installations such as laboratory equipment which use such a small amount of water. They also contain a durable silicone disc which has high heat and water hammer shock resistance and assures tight seating with the lightest of seating contact.

Full Size Orifice - Series 288A has a full-size orifice to assure pipe size capacity. Water passages are streamlined to provide high water flow with minimal pressure loss.

For bottom/inlet and outlet connection type vacuum breakers ¼", ⅜" (8, 10mm) size, send for ES-N388.



½" 288A

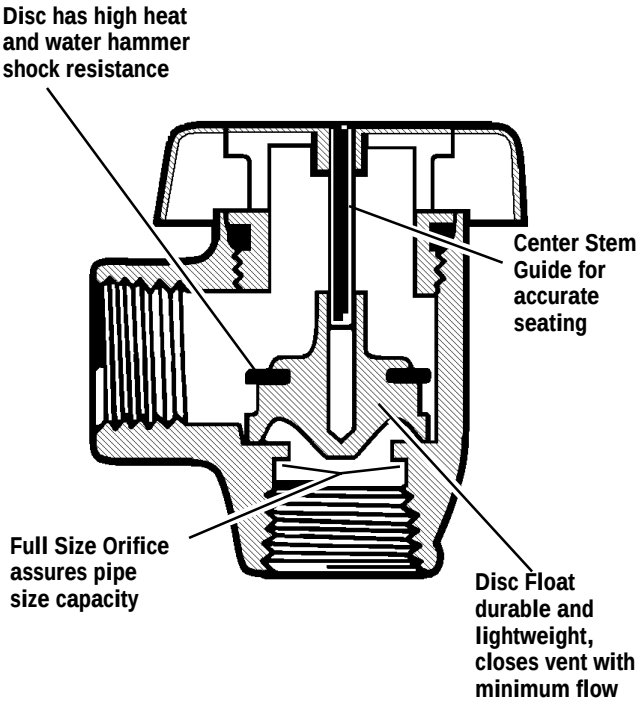

FEATURES

- *Brass Body*
- *Full size orifice for maximum flow*
- *Lightweight disc assembly prevents spilling under all rates of flow*

SPECIFICATIONS

For Anti-Siphon Vacuum Breakers

An atmospheric type anti-siphon vacuum breaker shall be installed where indicated on the plans to prevent the backsiphonage of contaminated water. Device shall include lightweight disc float with silicone disc for tight seating. This device is not to be used under continuous pressure or where there is a possibility that a backpressure condition may develop. The device shall meet the requirements of ASSE Standard 1001, ANSI A112.1.1 and CSA B64. Watts Regulator Company Series 288A.

WATTS® REGULATOR

MATERIALS

Sizes ¼" to 1" (6 to 25mm) are available in either plain brass or polished chrome finish. Durable silicone disc, high heat resistance. Sizes 1¼" to 3" (32 to 76mm) standardly furnished with plain brass finish.

PRESSURE-TEMPERATURE

Maximum temperature 180°F (82°C) at 125 psi (8.6 bars) working pressure.

INSTALLATIONS

Atmospheric VB must be installed 6" (152mm) above the highest point on the downstream piping. There can be no shutoff valves downstream of an AVB.

STANDARDS

ASSE No. 1001, IAPMO
CSA B.64.1.1

APPROVALS

ASSE
IAPMO

Certified thru 1" (25mm) CSA

DIMENSIONS-WEIGHT

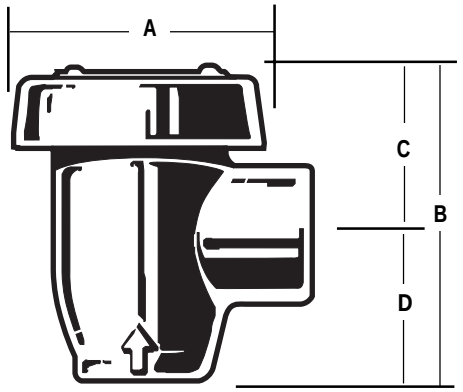

Model Plain Brass	Model Polished Chrome	Size (DN) in.	Size (DN) mm	A in.	A mm	B in.	B mm	C in.	C mm	D in.	D mm	Weight oz.	Weight gm.
288A	288A-C	¼	8	1¾	44	2¼	57	1¼	32	1	25	6	170
288A	288A-C	⅜	10	1¾	44	2¼	57	1¼	32	1	25	6	170
288A	288A-C	½	15	2	50	2¾	70	1½	38	1¼	32	8	227
288A	288A-C	¾	20	2¼	57	3	76	1½	38	1½	38	18	510
288A	288A-C	1	25	2⅞	73	3⅝	92	1⅞	48	1¾	44	28	794
288A		1¼	32	2⅞	73	3¾	95	1⅞	48	1⅞	48	34	964
288A		1½	40	3⅝	92	4½	114	2¼	57	2¼	57	54	1531
288A		2	50	4	100	5⅛	130	2⅝	67	2½	64	84	2381
288A		2½	65	6½	165	7½	191	4½	114	3	76	256	7258
288A		3	80	6½	165	8	200	4⅝	117	3⅜	86	274	7768

CAPACITY

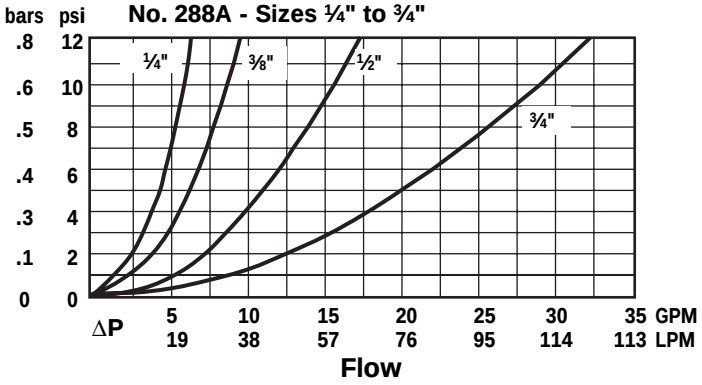

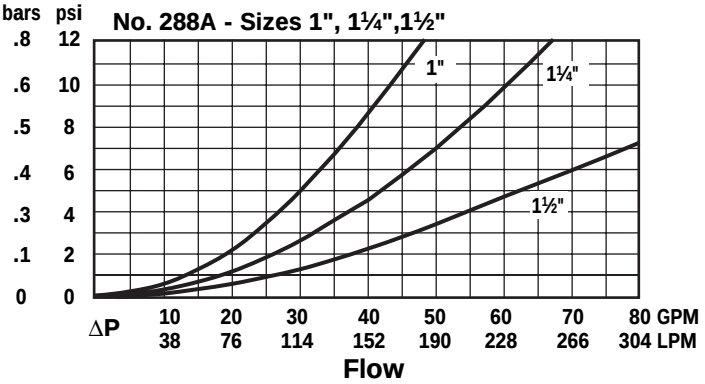

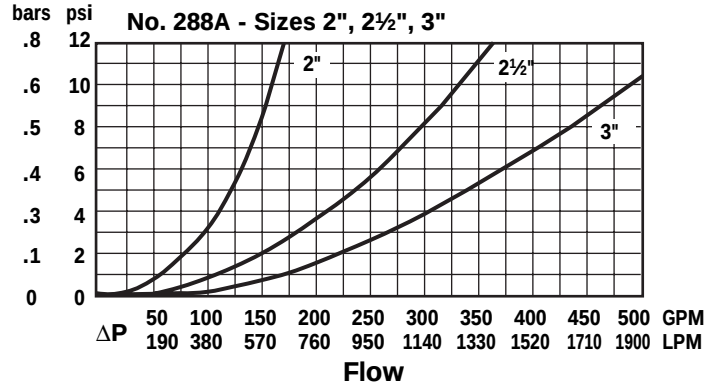

Since atmospheric type vacuum breakers are subject to normal maintenance and replacement, they should be located where emergency water spillage will create no problem and where they can be accessible for inspection or servicing.

IMPORTANT NOTE:

This device shall not be subjected to continuous pressure for more than twelve (12) hours per ASSE Std. 1001. For continuous pressure application, specify Watts Series 800 pressure type vacuum breakers. Vacuum breakers are not designed, tested or approved to protect against backpressure backflow. For protection against backpressure backflow, install Watts Series 909 or Series 009 reduced pressure principle backflow preventers.

Watts product specifications in U.S. customary units and metric are approximate and are provided for reference only. For precise measurements, please contact Watts Technical Service. Watts reserves the right to change or modify product design, construction, specifications, or materials without prior notice and without incurring any obligation to make such changes and modifications on Watts products previously or subsequently sold.

A LEADER IN VALVE TECHNOLOGY
WATTS® REGULATOR
Since 1874 — Watts Industries, Inc.
Water Products Division • Safety & Control Valves

USA: 815 Chestnut St., No. Andover, MA 01845-6098; www.wattsreg.com
Canada: 5435 North Service Rd., Burlington, ONT. L7L 5H7; www.wattscda.com

ISO 9001 CERTIFIED

©Watts Regulator Co., 1997