For Commercial Applications

Job Name _____ Contractor _____

Job Location _____ Approval _____

Engineer _____ Contractor's P.O. No. _____

Approval _____ Representative _____

Series PWS20, PWS20-2, PWS20-P

Commercial Water Softening Systems

Connection Size: 2" (50mm)
Flow Rates: Up to 420 gpm (1590 lpm)

WATTS pure water



Series PWS20



Series PWS20-2



Series PWS20-P

Watts Pure Water Series PWS20, PWS20-2, PWS20-P water softening systems are highly efficient conventional cation exchange type water softeners. They are suitable for commercial applications ranging from 90,000 to 600,000 grains of hardness removal per tank and flow rates up to 420 gpm (1590 lpm). Where continuous softened water is required PWS20-2 duplex alternating and PWS20-P systems can be specified for uninterrupted service. Regeneration is meter demand initiated. All cycles of regeneration are fully automatic and do not require manual actuation.

Watts Pure Water Series PWS20, PWS20-2, PWS20-P water softeners are designed for point of use or point of entry applications where the benefits of softened water are required. These systems exchange scale-forming calcium and magnesium ions with non scale-forming sodium ions to create soft water for a variety of applications.

Steam boiler make up water, water heater pretreatment, reverse osmosis pretreatment, cooling tower make up water, sterilizer make up water, washing, and process water are all common applications for the Watts Pure Water Series PWS20, PWS20-2 and PWS20-P water softeners. Watts Pure Water Series PWS20-P are ideal for commercial and industrial applications where high flow and high capacities are required to accommodate wide variances in flow rates.

Softened water provides a wide variety of benefits such as preventing lime scale formation in pipes, valves, water heating equipment, heat exchangers, and cooling towers to reducing mineral build up in areas that see excessive splashing such as food preparation counters and sink areas. Softened water also conserves soaps and cleaning agents by eliminating the formation of soap curd, so your cleaners can work on cleaning – not reacting with the hardness in your water.

Standards

Control Valve- Certified to NSF/ANSI Std. 61 and 372
Ion Exchange Resin- Certified to NSF/ANSI Std. 61
Mineral Tank- Certified to NSF/ANSI Std. 44 or 61

Specifications

A Watts Pure Water Series PWS20, PWS20-2, PWS20-P water softening system shall be installed on the building's main water line just after it enters the building. The installation point shall be after any backflow prevention or pressure regulating valves. Other installation options are to install a system just before the water heater or other types of equipment needing the protection of softened water. In installations where dedicated cold water make up to a water heater is the installation point, a backflow preventer and a thermal expansion tank must be installed as well. The system shall be installed with a bypass valve to allow for the shut down and removal of the unit without interrupting the water supply to the building.

The water softener shall be a down flow regenerated, metered demand, sodium cycle cation exchange type system with all components necessary for proper operation.

Electrical requirements are 120 volt 60 hertz. A local drain is required to accept drain water from the system. The feed water pressure must not fall below 25psi or exceed 125psi. Water temperature must not fall below 34°F or exceed 110°F (1°C - 43°C).The system shall provide softened water measuring less than one grain per gallon of hardness as Calcium Carbonate when operated within the manufacturer's operational specifications.

Watts product specifications in U.S. customary units and metric are approximate and are provided for reference only. For precise measurements, please contact Watts Technical Service. Watts reserves the right to change or modify product design, construction, specifications, or materials without prior notice and without incurring any obligation to make such changes and modifications on Watts products previously or subsequently sold.

WATTS®

Features

- Durable brass bodied control valve for years of service
- Fully automatic metered demand control valve certified to NSF/ANSI standards
- Sophisticated digital electronic controls that store operating history that can be accessed by the user
- Fully adjustable regeneration cycles
- Dry contact lock out switch for remote interface is standard
- High capacity resin certified to NSF/ANSI standards
- Highly corrosion resistant fiberglass tanks certified to NSF/ANSI standards
- Durable polypropylene lower distribution system

PWS20-P Features

- Easily select duplex, triplex or quadplex system with flow demand staging
- Model for capacities up to 600,000 grains per tank
- Arrange up to 4 tanks in parallel for flow rates up to 420 GPM
- All systems have no hard water bypass pistons
- Each system is complete with brine tank and meter
- All systems have Fleck brass in-line flow meters

Feed Water Guidelines

pH	6 to 10
Hardness (maximum)	Depends on customers acceptable hardness leakage level.
Water Pressure	25psi to 125psi (171kPa to 8.5 bar)
Temperature	34 - 110°F (1 - 43°C)
Free Chlorine (maximum)	1mg/L
Iron (maximum)	1mg/L
Oil and H2S	None Allowed
Turbidity	Less than 5.0 NTU

For all other guideline information please contact your Watts representative.

⚠ CAUTION

Do not use with water that is microbiologically unsafe or of unknown quality without adequate disinfection before or after the system.

Dimensions - Weights

PWS20 & PWS20-P

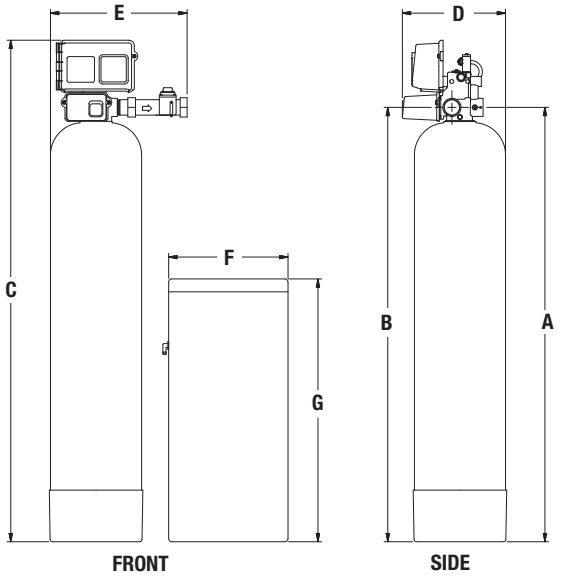

PWS20-2

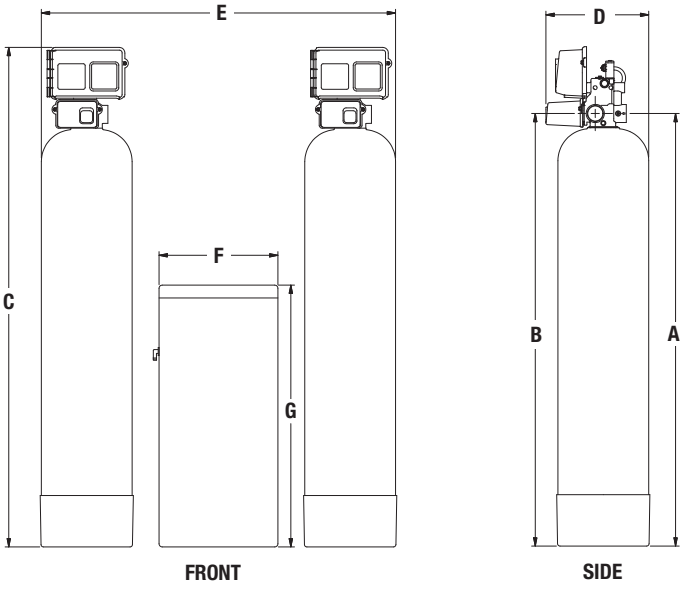

NOTICE

Dimensional data is for a single mineral tank system ONLY. PWS20-P models are composed of multiple PWS20 systems See Space Required in table below.

Series PWS20 & PWS20-P

MODEL NO.	DIMENSIONS														WEIGHTS	
	A		B		C		D		E		F		G			
	in.	*mm*	*in.*	*mm*	*in.*	*mm*	*in.*	*mm*	*in.*	*mm*	*in.*	*mm*	*in.*	*mm*	*lbs.*	*kgs.*
PWS20131D11	67 3/8	1711	67 3/8	1711	77 7/8	1978	16	406	21 1/4	538	18	457	40	1016	265	120
PWS20131E11	67 3/4	1721	67 3/4	1721	77 1/8	1959	17	432	22 1/4	564	18	457	40	1016	350	159
PWS20131F11	68 1/2	1740	68 1/2	1740	78 15/16	2004	18 1/8	460	23 1/4	589	24	607	41	1041	400	182
PWS20131G11	70 1/2	1791	70 1/2	1791	80 15/16	2055	21 1/8	536	24 11/16	627	24	607	50	1270	600	273
PWS20131H11	76 3/4	1949	76 3/4	1949	87 1/8	2213	24 1/8	613	26 1/4	665	30	762	50	1270	710	323
PWS20131I11	80 1/4	2038	80 1/4	2038	93 1/8	2302	30 1/8	765	30 1/8	764	39	991	48	1219	1160	527
PWS20131J11	86	2184	86	2184	97 7/16	2449	36 1/8	917	36 1/8	917	39	991	60	1524	1560	709

Series PWS20-2

MODEL NO.	DIMENSIONS														WEIGHTS	
	A		B		C		D		E		F		G			
	in.	*mm*	*in.*	*mm*	*in.*	*mm*	*in.*	*mm*	*in.*	*mm*	*in.*	*mm*	*in.*	*mm*	*lbs.*	*kgs.*
PWS20131D21	67 3/8	1711	67 3/8	1711	77 7/8	1978	16	406	60	1524	18	457	40	1016	450	205
PWS20131E21	67 3/4	1721	67 3/4	1721	77 1/8	1959	17	432	60	1524	18	457	40	1016	500	227
PWS20131F21	68 1/2	1740	68 1/2	1740	78 15/16	2004	18 1/8	460	70	1778	24	610	41	1041	800	364
PWS20131G21	70 1/2	1791	70 1/2	1791	80 15/16	2055	21 1/8	536	75	1905	24	610	50	1270	1200	545
PWS20131H21	76 3/4	1949	76 3/4	1949	87 1/8	2213	24 1/8	613	87	2210	30	762	50	1270	1400	636
PWS20131I21	80 1/4	2038	80 1/4	2038	93 1/8	2302	30 1/8	765	104	2642	39	991	48	1219	2200	1000
PWS20131J21	86	2184	86	2184	97 7/16	2449	36 1/8	917	115	2921	39	991	60	1524	3000	1364

NOTICE

Service gpm is for a single mineral tank system ONLY. For PWS20-P Series systems, you will need to multiply the Service gpm by (x2) for Duplex, (x3) for Triplex and (x4) for Quadplex systems.

Specifications

MODEL NO.	MINERAL TANK			BRINE TANK		SOFTENING CAPACITY		LBS. SALT PER REGENERATION		FLOW RATE & PRESSURE		
	TANK SIZE	RESIN Ft^3	GRAVEL	TANK SIZE	SALT FILL	MAX	MIN	MAX	MIN	SERV GPM	DROP PSI	BKW GPM
PWS20131D11	14" x 65"	3	60 lbs.	18" x 40"	400	90 K	60 K	45	18	25/40	15/25	5
PWS20131E11	16" x 65"	4	80 lbs.	18" x 40"	400	120 K	80 K	60	24	35/55	15/25	7
PWS20131F11	18" x 65"	5	100 lbs.	24" x 41"	600	150 K	100 K	75	30	57/65	15/25	10
PWS20131G11	21" x 62"	7	100 lbs.	24" x 50"	600	210 K	140 K	105	42	60/77	15/25	12
PWS20131H11	24" x 72"	10	200 lbs.	30" x 50"	1200	300 K	200 K	150	60	74/97	15/25	15
PWS20131I11	30" x 72"	15	400 lbs.	39" x 48"	2200	450 K	300 K	225	90	80/100	15/25	25
PWS20131J11	36" x 72"	20	500 lbs.	39" x 60"	2200	600 K	400 K	300	120	84/105	15/25	35

Ordering Information for 2" Simplex and Duplex Alternating Softeners

MODEL NO.	ORDERING CODES	DESCRIPTION	SPACE REQUIRED D X W X H	WEIGHT LBS
PWS20131D11	7100031	3 Cubic Foot 2" Simplex Softener with Flow Meter	18" x 39" x 87"	265
PWS20131E11	7100032	4 Cubic Foot 2" Simplex Softener with Flow Meter	18" x 39" x 87"	350
PWS20131F11	7100033	5 Cubic Foot 2" Simplex Softener with Flow Meter	24" x 48" x 89"	400
PWS20131G11	7100034	7 Cubic Foot 2" Simplex Softener with Flow Meters	24" x 52" x 89"	600
PWS20131H11	7100035	10 Cubic Foot 2" Simplex Softener with Flow Meter	30" x 60" x 96"	710
PWS20131I11	7100036	15 Cubic Foot 2" Simplex Softener with Flow Meter	39" x 75" x 106"	1160
PWS20131J11	7100037	20 Cubic Foot 2" Simplex Softener with Flow Meter	39" x 81" x 107"	1560
PWS20131D21	7100038	3 Cubic Foot 2" Duplex Alternating Softener with Flow Meter	18" x 60" x 87"	450
PWS20131E21	7100039	4 Cubic Foot 2" Duplex Alternating Softener with Flow Meter	18" x 64" x 87"	500
PWS20131F21	7100040	5 Cubic Foot 2" Duplex Alternating Softener with Flow Meter	24" x 72" x 89"	800
PWS20131G21	7100041	7 Cubic Foot 2" Duplex Alternating Softener with Flow Meter	24" x 80" x 89"	1200
PWS20131H21	7100042	10 Cubic Foot 2" Duplex Alternating Softener with Flow Meter	30" x 90" x 96"	1400
PWS20131I21	7100043	15 Cubic Foot 2" Duplex Alternating Softener with Flow Meter	39" x 111" x 106"	2200
PWS20131J21	7100044	20 Cubic Foot 2" Duplex Alternating Softener with Flow Meter	39" x 123" x 107"	3000

Ordering Information for 2" Duplex Progressive Softeners

MODEL NO.	ORDERING CODE	DESCRIPTION	SPACE REQUIRED D X W X H	WEIGHT LBS
PWS20131D22	7100726	3 Cubic Foot 2" Progressive Duplex Softener with Flow Meters	38" x 55" x 87"	530
PWS20131E22	7100727	4 Cubic Foot 2" Progressive Duplex Softener with Flow Meters	39" x 57" x 87"	700
PWS20131F22	7100728	5 Cubic Foot 2" Progressive Duplex Softener with Flow Meters	46" x 59" x 89"	800
PWS20131G22	7100729	7 Cubic Foot 2" Progressive Duplex Softener with Flow Meters	49" x 62" x 91"	1200
PWS20131H22	7100645	10 Cubic Foot 2" Progressive Duplex Softener with Flow Meters	59" x 65" x 98"	1420
PWS20131I22	7100646	15 Cubic Foot 2" Progressive Duplex Softener with Flow Meters	74" x 73" x 104"	2320
PWS20131J22	7100647	20 Cubic Foot 2" Progressive Duplex Softener with Flow Meters	80" x 85" x 108"	3120

Ordering Information for 2" Triplex Progressive Softeners

MODEL NO.	ORDERING CODE	DESCRIPTION	SPACE REQUIRED D X W X H	WEIGHT LBS
PWS20131D33	7100730	3 Cubic Foot 2" Progressive Triplex Softener with Flow Meters	38" x 82" x 87"	795
PWS20131E33	7100731	4 Cubic Foot 2" Progressive Triplex Softener with Flow Meters	39" x 85" x 87"	1050
PWS20131F33	7100732	5 Cubic Foot 2" Progressive Triplex Softener with Flow Meters	46" x 88" x 89"	1200
PWS20131G33	7100733	7 Cubic Foot 2" Progressive Triplex Softener with Flow Meters	49" x 92" x 91"	1800
PWS20131H33	7100648	10 Cubic Foot 2" Progressive Triplex Softener with Flow Meters	59" x 97" x 98"	2130
PWS20131I33	7100649	15 Cubic Foot 2" Progressive Triplex Softener with Flow Meters	74" x 109" x 104"	3480
PWS20131J33	7100650	20 Cubic Foot 2" Progressive Triplex Softener with Flow Meters	80" x 127" x 108"	4680

Ordering Information for 2" Quadplex Progressive Softeners

MODEL NO.	ORDERING CODE	DESCRIPTION	SPACE REQUIRED D X W X H	WEIGHT LBS
PWS20131D44	7100734	3 Cubic Foot 2" Progressive Quadplex Softener with Flow Meters	38" x 109" x 87"	1060
PWS20131E44	7100735	4 Cubic Foot 2" Progressive Quadplex Softener with Flow Meters	39" x 113" x 87"	1400
PWS20131F44	7100736	5 Cubic Foot 2" Progressive Quadplex Softener with Flow Meters	46" x 117" x 89"	1600
PWS20131G44	7100737	7 Cubic Foot 2" Progressive Quadplex Softener with Flow Meters	46" x 123" x 91"	2400
PWS20131H44	7100738	10 Cubic Foot 2" Progressive Quadplex Softener with Flow Meters	59" x 129" x 98"	2840
PWS20131I44	7100739	15 Cubic Foot 2" Progressive Quadplex Softener with Flow Meters	74" x 145" x 104"	4640
PWS20131J44	7100740	20 Cubic Foot 2" Progressive Quadplex Softener with Flow Meters	80" x 169" x 108"	6240

Notes: Capacities are based on resin manufacturer's data and are dependent upon influent water TDS, temperature, bed depth, and flow rates. Feed water must be free of oil and color. Pipe size, tank size, and space requirements are in inches. Capacities and flow rates expressed above are per tank. Flow rates listed at 25psi drops are for intermittent peak flow rates and are not to be used as continuous flows.

NOTICE

The information contained herein is not intended to replace the full product installation and safety information available or the experience of a trained product installer. You are required to thoroughly read all installation instructions and product safety information before beginning the installation of this product.

USA: T: (800) 224-1299 • F: (978) 794-1848 • Watts.com/PureWater
Canada: T: (905) 332-4090 • F: (905) 332-7068 • Watts.ca/PureWater
Latin America: T: (52) 81-1001-8600 • Watts.com/PureWater

© 2018 Watts