TEL5LG10#CP
TEL5LG10R#CP
TELLG100#$$(Spout)
TN78-10V710 (Controller)

Sensor Faucet, Gooseneck Spout
EcoPower® Self-Generating System
Thermal Mixing, 0.5 GPM

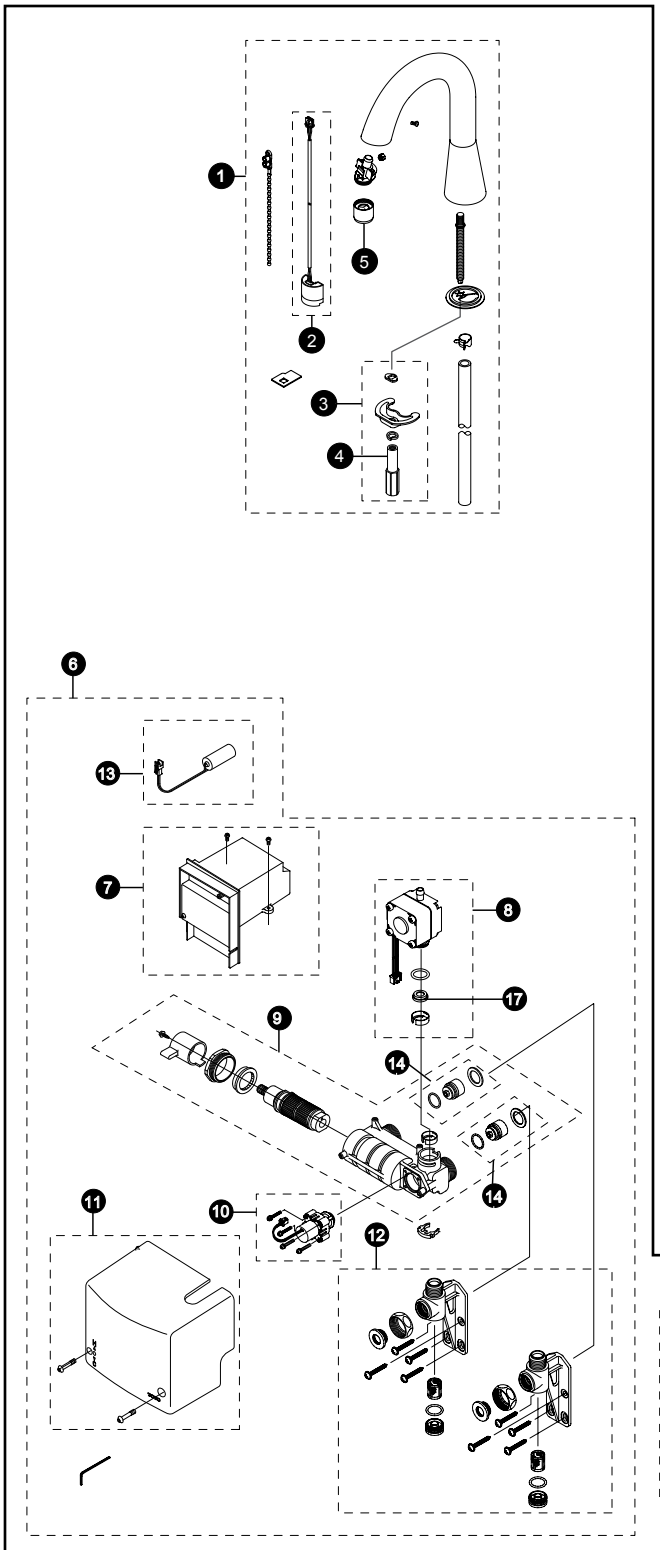

Item	Part	Description
1	TELLG100#$$	Spout Assembly
2	TH559EDV405	Sensor
3	TH559EDV402R	Spout Mounting Kit
4	TH559EDV403R	Spout Nut
5	TH559EDV565	Nozzle Assembly Set (0.5 GPM Aerator Flow Type)
6	TN78-10V710	Controller Assembly
7	TH559EDV560	Thermal Dynamo Control Unit 10 sec.
8	TH559EDV563	0.5 GPM Dynamo & Flow Control Unit
9	TH559EDV469	Thermal Mixing Valve
10	TH559EDV470	Solenoid & Diaphragm Assembly
11	TH559EDV471	Control Cover Set
12	TH559EDV429R	Mounting Bracket Set
13	THP3053	Back-Up Battery
14	TH559EDV472	Check Valve
15	THP3158#CP	Cover Plate - 4”
16	71244T8CC	Cover Plate - 8”
17	TH559EDV572	1.0gpm Flow Regulator

Product Number Explanations

Sensor Faucet
(T) Fitting
(E) Electronic
(L) Lavatory
(5) Thermal Mixing
(L) 0.5 GPM Generator Type
(G) Gooseneck Spout
(10) 10 Second
(#CP) Chrome Finish