U.S. Tsubaki Power Transmission, LLC
301 E. Marquardt Dr.
Wheeling, IL 60090

Phone: 847.459.9500 or 800.323.7790
Fax: 847.459.9515
Email: sales@ustsubaki.com

Website: www.ustsubaki.com

ITEM # MZ35-1D, MZ35-1 1/4" BORE CAM CLUTCH

MZ Series Cam Clutch products are designed for general overrunning applications. The MZ Series can be used in applications which require the inner or outer race to have overrunning capability. The MZ Series comes pre-lubricated with grease and is ready to install. No lubrication maintenance is required. This series is ideal for gears, pulleys and clutch assemblies.



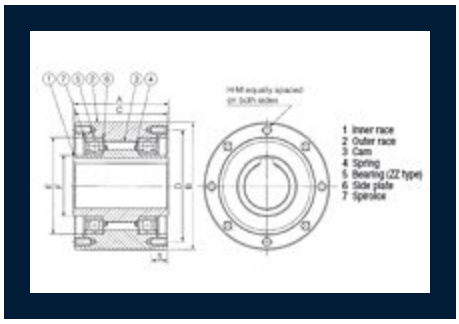

Specifications

Bore Size	1.250 in
Bore Keyway	1/4 x 1/8"
Torque Capacity	796.6 lb·ft 1080.0 N·m
Drag Torque	0.361 lb·ft 0.49 N·m
Max. Overrunning Shaft	1700 rpm
Max. Overrunning Outer Race	300 rpm

Max. Indexing	150 cpm
A (Overall Width)	3.425 in 87.00 mm
B (Overall Diameter)	4.331 in 110.00 mm
C (Overall Race Width)	3.346 in 85.00 mm
D (Pitch Circle Diameter)	3.740 in 95.00 mm
E (Outer Race I.D.)	3.150 in 80.00 mm
F (Inner Race O.D.)	1.969 in 50.00 mm
G (Counter Bore Depth)	0.343 in 8.70 mm
S (Thread Depth)	0.630 in 16.00 mm
H (Quantity)	6
M (Size x Pitch)	M8x1.25
Weight	10.560 lb 4.800 kg