U.S. Tsubaki Power Transmission, LLC
301 E. Marquardt Dr.
Wheeling, IL 60090

Phone: 847.459.9500 or 800.323.7790
Fax: 847.459.9515

Email: sales@ustsubaki.com
Website: www.ustsubaki.com

ITEM # TSS12, TSS-12 MM BORE CAM CLUTCH

TSS Series Cam Clutch is designed for press fit installation with outside dimensions the same as the 62 Series ball bearing. As a sprag clutch, higher torque capacities are often higher than a similar ramp & roller design. This design provides easy handling and installation, most often with a Series 62 ball bearing located next to the TSS Cam Clutch. The TSS Series is ideal for applications that require high speed inner race overrunning in a very compact package. This series ships pre-

more

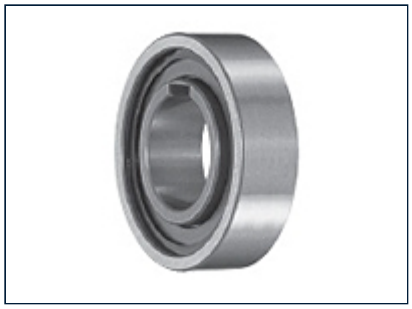

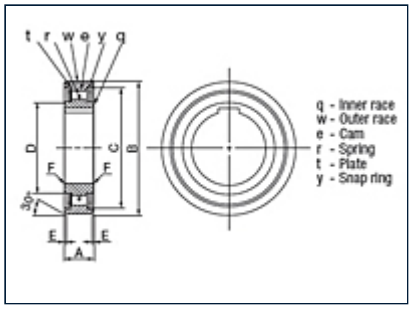

Specifications

Bore Size	0.472 in 12.00 mm
Torque Capacity	12.5 lb·ft 17.0 N·m
Max. Overrunning Inner Race	4000 rpm

Max. Overrunning Outer Race	2000 rpm
Drag Torque	0.007 lb·ft 0.01 N·m
Keyway	4 x 1.8 mm
A (Overall Width)	0.394 in 10.00 mm
B (Overall Diameter)	1.260 in 32.00 mm
C (Outer Race I.D.)	1.161 in 29.50 mm
D (Inner Race I.D.)	0.709 in 18.00 mm
E (Offset)	0.024 in 0.60 mm
F (Chamfer)	0.024 in 0.60 mm
Weight	0.068 lb 0.031 kg