U.S. Tsubaki Power Transmission, LLC
301 E. Marquardt Dr.
Wheeling, IL 60090

Phone: 847.459.9500 or 800.323.7790
Fax: 847.459.9515
Email: sales@ustsubaki.com

Website: www.ustsubaki.com

ITEM # MZEU35, MZEU-35 MM BORE CAM CLUTCH

MZEU Series is a general purpose Cam Clutch suitable for a wide variety of applications. A selection of add-on flanges and torque arms are available enabling this Cam Clutch to easily fit where custom designed products were previously required. MZEU12 to MZEU80 are pre-greased, requiring no lubrication. MZEU90 to MZEU150 require oil lubrication. Contact Tsubaki for indexing applications above 50 cycles per minute.



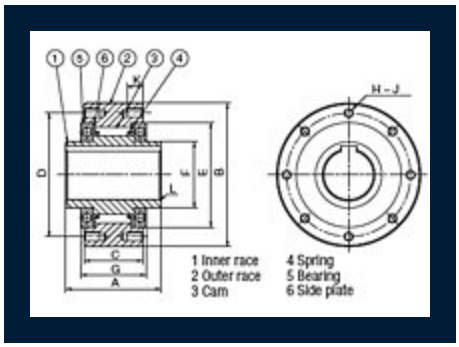

Specifications

Bore Size	1.378 in 35.00 mm
Torque Capacity	748.6 lb·ft 1015.0 N·m
Max. Overrunning Shaft	1400 rpm
Max. Overrunning Outer Race	300 rpm
Drag Torque	0.361 lb·ft 0.49 N·m

Inner Race Keyway	10 x 3.3 mm
A (Overall Width)	2.913 in 74.00 mm
B (Overall Height)	4.331 in 110.00 mm
C (Outer Race Width)	1.772 in 45.00 mm
D (Bolt Circle Diameter)	3.780 in 96.00 mm
E (Outer Race I.D.)	3.150 in 80.00 mm
F (Inner Race O.D.)	1.969 in 50.00 mm
G (Cam Cage Width)	2.008 in 51.00 mm
J (Quantity)	6
H (Bolt Circle Tap)	M6
K (Thread Depth)	0.472 in 12.00 mm
L (Chamfer)	0.039 in 1.00 mm
Weight	7.040 lb 3.200 kg