U.S. Tsubaki Power Transmission, LLC
301 E. Marquardt Dr.
Wheeling, IL 60090

Phone: 847.459.9500 or 800.323.7790
Fax: 847.459.9515
Email: sales@ustsubaki.com

Website: www.ustsubaki.com

ITEM # MZEU60, MZEU-60 MM BORE CAM CLUTCH

MZEU Series is a general purpose Cam Clutch suitable for a wide variety of applications. A selection of add-on flanges and torque arms are available enabling this Cam Clutch to easily fit where custom designed products were previously required. MZEU12 to MZEU80 are pre-greased, requiring no lubrication. MZEU90 to MZEU150 require oil lubrication. Contact Tsubaki for indexing applications above 50 cycles per minute.



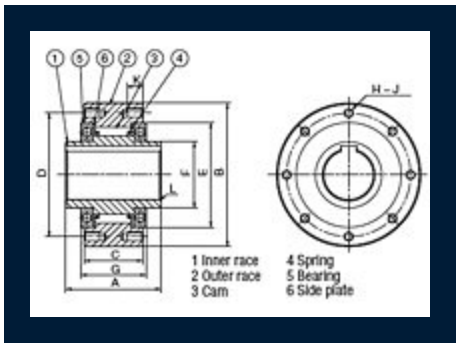

Specifications

Bore Size	2.362 in 60.00 mm
Torque Capacity	2175.8 lb·ft 2950.0 N·m
Max. Overrunning Shaft	1200 rpm
Max. Overrunning Outer Race	250 rpm
Drag Torque	0.723 lb·ft 0.98 N·m

Inner Race Keyway	18 x 4.4 mm
A (Overall Width)	4.488 in 114.00 mm
B (Overall Height)	6.693 in 170.00 mm
C (Outer Race Width)	3.071 in 78.00 mm
D (Bolt Circle Diameter)	5.906 in 150.00 mm
E (Outer Race I.D.)	4.921 in 125.00 mm
F (Inner Race O.D.)	3.150 in 80.00 mm
G (Cam Cage Width)	3.504 in 89.00 mm
J (Quantity)	10
H (Bolt Circle Tap)	M10
K (Thread Depth)	0.630 in 16.00 mm
L (Chamfer)	0.059 in 1.50 mm
Weight	27.060 lb 12.300 kg