U.S. Tsubaki Power Transmission, LLC
301 E. Marquardt Dr.
Wheeling, IL 60090

Phone: 847.459.9500 or 800.323.7790
Fax: 847.459.9515
Email: sales@ustsubaki.com

Website: www.ustsubaki.com

ITEM # BR50HT-B86B-60, BR-HT50-60.00 MM BORE CAM CLUTCH

BR-HT is mainly used in backstop applications as an integral part of a gear reducer. Prevention of reverse rotation for inclined conveyor and bucket elevator are typical application BR-HT assures not only the immediate backstop function under high torque, but also long service life by the “lift-off” design. In addition, installation on the high speed shaft with low torque enables selection of more compact models with resulting lower cost.



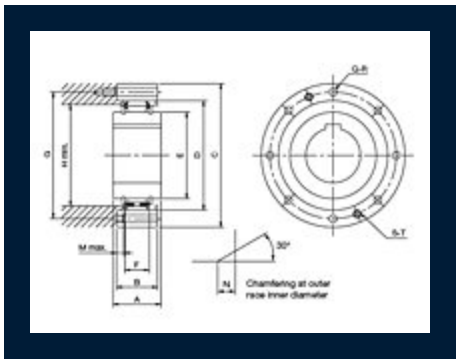

Specifications

Torque	1069.5 lb·ft 1450.0 N·m
Min. Inner Race Overrunning Speed	590 rpm
Max. Inner Race Overrunning Speed	3600 rpm
Max. Engagement	280 rpm
Bore Size	2.362 in 60.00 mm

A (Inner Race Width)	1.575 in 40.00 mm
B (Outer Race Width)	1.575 in 40.00 mm
C (Outer Race O.D.)	5.906 in 150.00 mm
D (Outer Race I.D.)	4.331 in 110.00 mm
E (Inner Race O.D.)	3.346 in 85.00 mm
G (Bolt Circle Diameter)	5.197 in 132.00 mm
Q-R (Mounting Holes Quantity - Size)	8-M8
S-T (Removed Holes Quantity - Size)	2-M8
F (Cam Width)	0.984 in 25.00 mm
Weight	9.460 lb 4.300 kg
H (Housing Bore Min.)	4.055 in 103.00 mm
M (Counter Bore Depth Max.)	0.256 in 6.50 mm
N (Chamfer)	0.039 in 1.00 mm