U.S. Tsubaki Power Transmission, LLC
301 E. Marquardt Dr.
Wheeling, IL 60090

Phone: 847.459.9500 or 800.323.7790
Fax: 847.459.9515
Email: sales@ustsubaki.com

Website: www.ustsubaki.com

ITEM # MIUS600-1F, MIUS600-1 3/8" BORE CAM CLUTCH

MIUS Series Cam Clutch units are designed for indexing applications. In this mode of operation, reciprocating motion applied to the driving race of the clutch is transformed into uni-directional intermittent motion, at the driven race. The clutch drives in the forward stroke (index) and overruns on the return stroke. In addition to torque capacity, consider the number of indexing cycles per minute. This series ships pre-lubricated with oil.



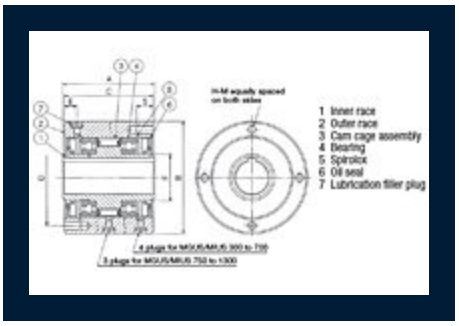

Specifications

Bore Size	1.375 in 34.93 mm
Bore Keyseat	3/8 x 3/16"
Torque Capacity	2315.9 lb·ft 3140.0 N·m
Max. Overrunning Inner Race	30 rpm
Max. Indexing	300 cpm

Drag Torque	1.136 lb·ft 1.54 N·m
A (Overall Width)	3.750 in 95.25 mm
B (Overall Diameter)	5.375/5.373 in 136.53/136.48 mm
C (Outer Race Width)	3.630 in 92.20 mm
D (Pitch Circle Diameter)	4.750 in 120.65 mm
E (Filler Plug Location)	0.503 in 12.80 mm
F (Inner Race O.D.)	2.748 in 69.80 mm
S (Thread Depth)	0.630 in 16.00 mm
H (No. of Tapped Holes)	6
M (Thread)	5/16-24
Oil Filler Plug	M6 x P1.0
Oil Capacity	5.44 oz 160 mL
Weight	18.959 lb 8.600 kg