**U.S. Tsubaki Power Transmission, LLC**
301 E. Marquardt Dr.
Wheeling, IL 60090

**Phone:** 847.459.9500 or 800.323.7790
**Fax:** 847.459.9515
**Email:** sales@ustsubaki.com

**Website:** www.ustsubaki.com

# ITEM # MZEU30, MZEU-30 MM BORE CAM CLUTCH

MZEU Series is a general purpose Cam Clutch suitable for a wide variety of applications. A selection of add-on flanges and torque arms are available enabling this Cam Clutch to easily fit where custom designed products were previously required. MZEU12 to MZEU80 are pre-greased, requiring no lubrication. MZEU90 to MZEU150 require oil lubrication. Contact Tsubaki for indexing applications above 50 cycles per minute.




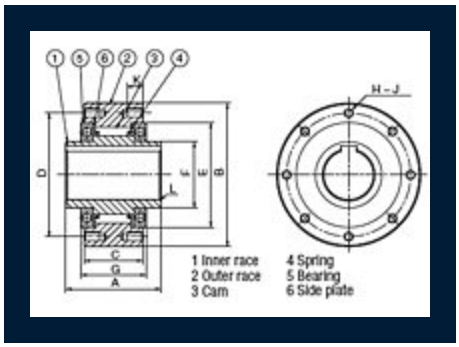


## Specifications

| | |
|---|---|
| **Bore Size** | 1.181 in<br>30.00 mm |
| **Torque Capacity** | 542.1 lb·ft<br>735.0 N·m |
| **Max. Overrunning Shaft** | 1500 rpm |
| **Max. Overrunning Outer Race** | 500 rpm |
| **Drag Torque** | 0.288 lb·ft<br>0.39 N·m |

| | |
|---|---|
| **Inner Race Keyway** | 8 x 3.3 mm |
| **A (Overall Width)** | 2.677 in<br>68.00 mm |
| **B (Overall Height)** | 3.937 in<br>100.00 mm |
| **C (Outer Race Width)** | 1.693 in<br>43.00 mm |
| **D (Bolt Circle Diameter)** | 3.425 in<br>87.00 mm |
| **E (Outer Race I.D.)** | 2.953 in<br>75.00 mm |
| **F (Inner Race O.D.)** | 1.772 in<br>45.00 mm |
| **G (Cam Cage Width)** | 1.890 in<br>48.00 mm |
| **J (Quantity)** | 6 |
| **H (Bolt Circle Tap)** | M6 |
| **K (Thread Depth)** | 0.394 in<br>10.00 mm |
| **L (Chamfer)** | 0.039 in<br>1.00 mm |
| **Weight** | 5.720 lb<br>2.600 kg |