TSUBAKI

BACKSTOP CAM CLUTCH PRODUCTS



www.ustsubaki.com

TSUBAKI
BACKSTOP CAM CLUTCH PRODUCTS
Product Catalog

Tsubaki Cam Clutch Solutions

Over the last 50 years, Tsubaki engineers have spent thousands of man hours designing and improving uni-directional/mechanical clutches in an effort to improve reliability and performance. Evolution of the uni-directional clutch started with simple prop and ratchet type designs, and has progressed to the roller ramp and non-contact sensing cam type commonly used today. Innovative designs and features incorporated into our Cam Clutch products assure efficient and dependable operation in the harshest environments.

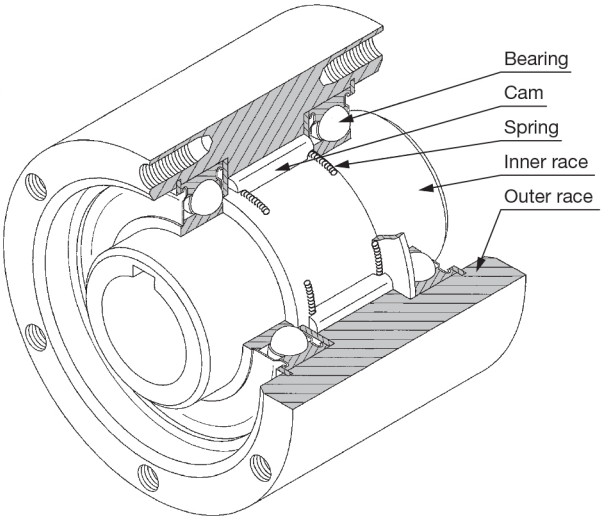

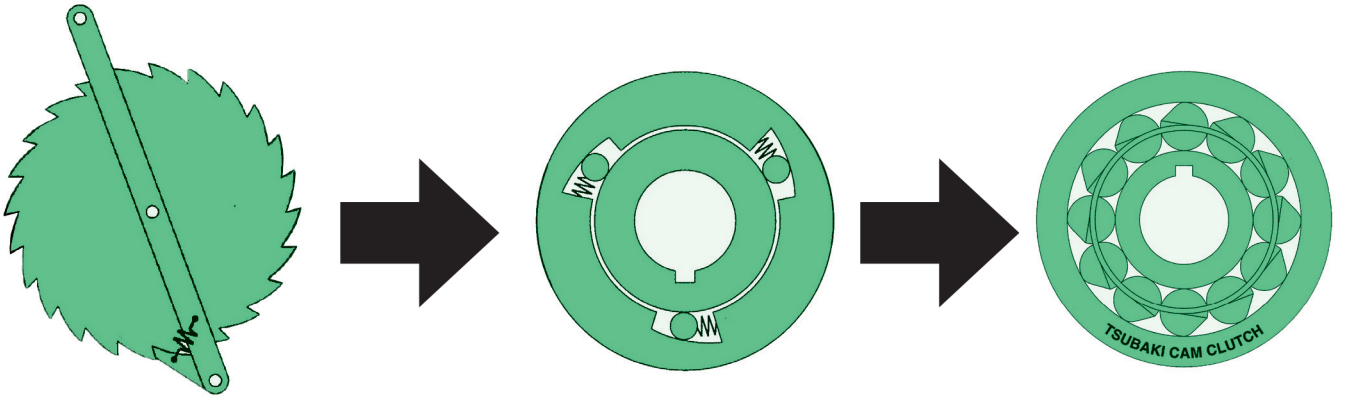

Ratchet Clutch | Roller Clutch | Tsubaki Cam Clutch

Typical Applications

Air Cleaning Plants
Agricultural Machines
Bucket Elevators
Compressors
Conveyors
Cranes and Hoists
Dry Cleaning Machinery
Duplicator Equipment
Heat-treatment Furnaces
Induced Draft Fans
Muti-state Conveyors
Packaging Machinery
Printing Machinery
Pumps
Punch Presses and Feeders
Power Plants
Refinery Equipment
Speed Reducers
Standby Power Units
Textile Looms
Two-speed Grinders
Fish Net Machines
Washing Machines
Wire Winding Machines



TABLE OF CONTENTS

Cam Clutch Basics	1
BR Non-contact Innovation	4
Backstop Clutch Selection Guide	5
BS-HS Series Cam Clutch	11
BS Series Cam Clutch	13
BS-R Series Cam Clutch	19
BS/BS-HS Series Safety Cover	23
BS-HS Series Torque Arm	25
BS Series Torque Arm	27
BSEU Series Cam Clutch	31
BR-HT Series Cam Clutch	33
Cam Clutch Calculated Wear Life	37
Shaft Tolerance Guide	41
Backstop Application Request Form	42

TSUBAKI BACKSTOP CAM CLUTCH PRODUCTS

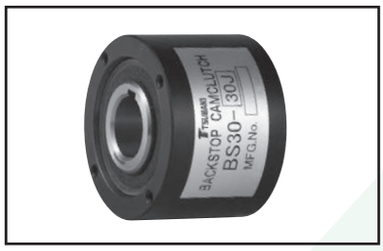

BS/BS-HS

BS & BS-HS provide designs available for both low and high speed conveyor applications. Non-rollover design provides additional safety.

Bore Range:
0.750" to 17.717"
(20 to 450 mm)
Torque Range:
217 to 722,800 lb.ft.
(294 to 980,000 Nm)

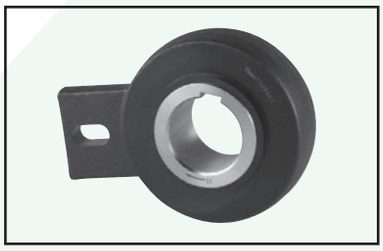

BSEU

BSEU Cam Clutches are a European variation popular on many bucket elevators in North and South America.

Bore Range:
0.787" to 3.543"
(20 to 90 mm)
Torque Range:
159 to 3,467 lb.ft.
(216 to 4,700 Nm)

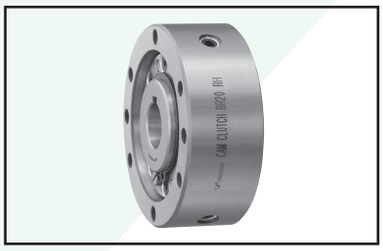

BR-HT

BR-HT Series is designed for backstop applications where high-speed overrunning is required. Lift-off cam design assures minimal heat generation and longest life.

Bore Range:
0.787" to 5.118"
(20 to 320 mm)
Torque Range:
77 to 269,950 lb.ft
(105 to 366,000 Nm)

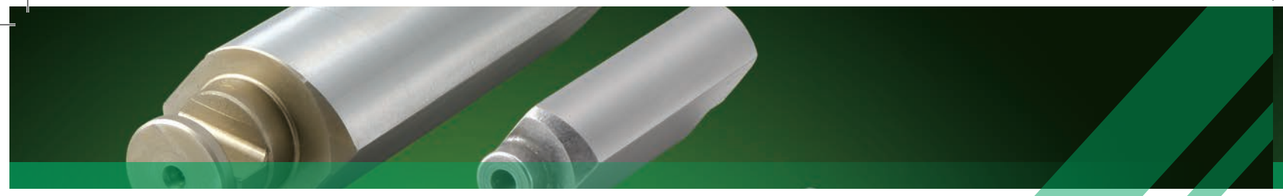

CAM CLUTCH BASICS

All Tsubaki Cam Clutches use a cam type construction. This is also referred to as a “sprag” style clutch. An older style clutch which Tsubaki does not supply is called a “Ramp & Roller” or simply a "Roller" clutch. The following is an explanation of the features of each type. This discussion mentions Tsubaki BS Series backstop clutches but is relevant to other Tsubaki Cam Clutches.

Non-rollover Backstop Cam



General Cam Construction

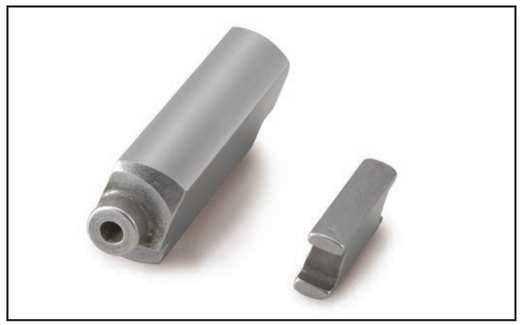

Cams and their constructions

The BS Series Cam Clutches use non-rollover cams which provide an additional level of safety. Even if a Cam Clutch has been selected appropriately for an application, unanticipated loads can occur. With a traditional cam profile, as used by some manufacturers, the unanticipated load might cause the cam to “rollover,” allowing the conveyor to move backward. The cam profile used by Tsubaki is most suited for the backstopping function, placing importance on the load distribution among multiple cams and a large surface cross section. Even if an unexpectedly large reverse torque occurs, the clutches will not roll over, preventing the conveyor from reversing.

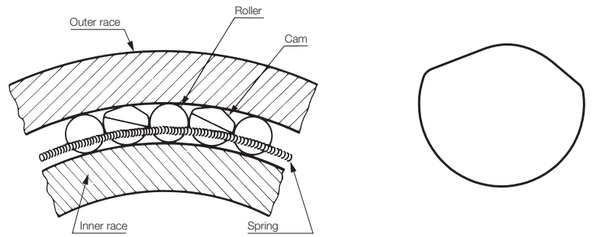

Small size Cam Clutch construction and cam profile

Small size BS Cam Clutches use a structure where cams and rollers are arranged alternately, and rollers act as a bearing to maintain the concentricity of the inner and outer races.

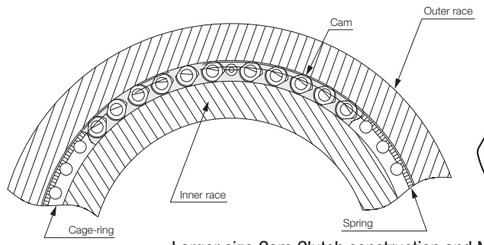

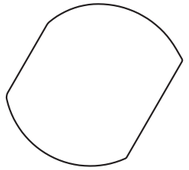

Larger size Cam Clutch construction and Non-rollover cam design

Large size BS-HS series Cam Clutches use a unique cam cage and structure supporting both sides with bearings, making it possible to use at a higher overrunning speed. Additionally, torque capacity is significantly increased allowing the large conveyor to be operated much more safely.



CAM CLUTCH BASICS

OPERATING PRINCIPLES

The outer race's rotation is stopped by the torque arm. Cams contact with the inner and outer races at points A and B respectively. AB maintains a constant engagement angle (strut angle º) with the center line O-O'. The strut angle is an integral part of the overrunning and engagement function of the BS Cam Clutch. See ***1***.

1

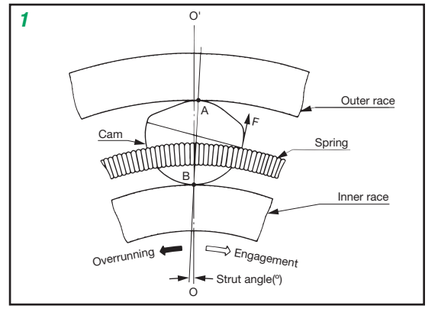

Springs give the rotational moment of F to cams ensuring precise contact is maintained between the inner and outer races. When the inner race (conveyor shaft) rotates in the direction of the black arrow, the inner race overruns smoothly because AB does not act as a strut. At this time, cams maintain light contact due to the spring force. See ***2***.

2

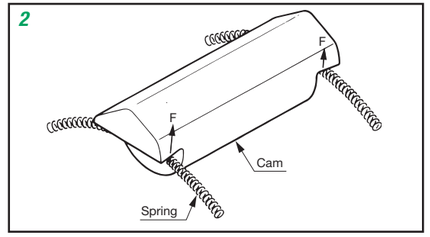

When the conveyor stops and the inner race (conveyor shaft) rotates in the direction of the white arrow, the inner race is locked immediately by the cams because AB acts as a strut, and prevents the conveyor from rotating in reverse. See ***3***.

3

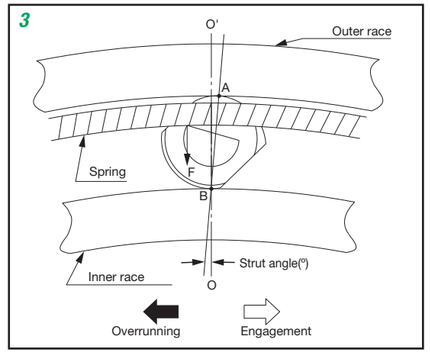

Self-lubrication function

When the inner race overruns, rollers also rotate so the cam and roller cage orbit around the outer circumference of the inner race at low speed. Grease in the cam and roller cage spreads completely throughout the insides of the Cam Clutch due to the orbital motion, thus maintaining good lubrication.

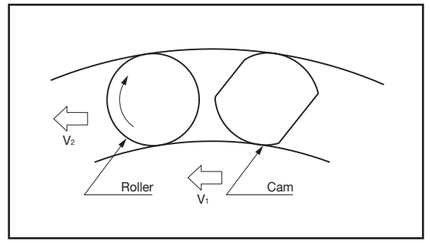



CAM CLUTCH BASICS

DISPLACEMENT OF CONTACT POINT FUNCTION

Rollers function as bearings and orbit while rotating on their axis, and supporting the outer race. There is a slight clearance between the rollers, the inner and outer races; therefore the bottom of the cam space between the inner and outer races is slightly wider compared with the top. Cams always maintain contact by spring force, and the slant of the cams is automatically different at the top and the bottom.

Cams continuously orbit by changing the contact point with the inner and outer races; therefore the wear on cams due to overrunning is diminished to the minimum, and the overrunning wear life on the Cam Clutch is at the maximum length.

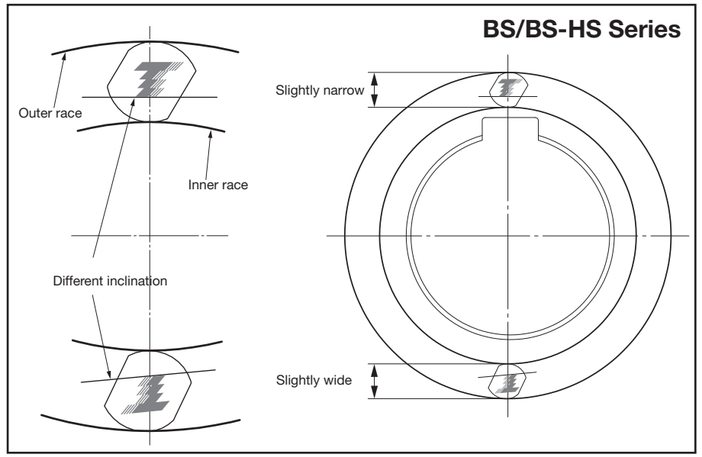

For the conveyor, which is always in an overrunning condition during the operation, as well as the self-lubrication function and the sliding speed diminishing function, it is one of the major features of a cam and roller cage to realize a long operating life.

Tsubaki BS and BS-HS Cam Clutch compared with Ramp & Roller Clutch

Cam Clutch cams slide on the outer circumference of the inner race (Di) at the decelerated sliding speed due to the sliding speed diminishing function described above. The contact force of cams and inner and outer races are given only by spring force (Ps).

As for the Roller Clutches, rollers slide in the inner circumference of the outer race (Do) because rollers are built onto a roller cage which is connected with the inner race. Therefore the sliding speed of the Roller Clutch is faster when compared with that of the Cam Clutch between the cams and inner race. In addition, the contact force of rollers and the outer race is quite large in the Ramp & Roller design because the centrifugal force (Pc) caused by the rotation of the roller cage is added to the spring force (Ps).

The BS Cam Clutches overrun with low sliding speed and low contact force, thus the BS Cam Clutches have a long overrunning wear life when compared with the Roller Clutches.

Cam Clutch **Roller Clutch**

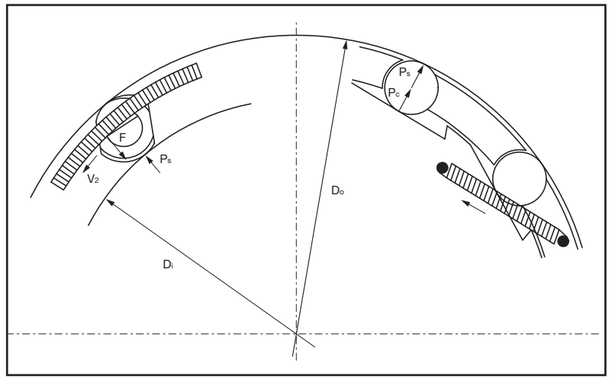

BR-HT, BREU SERIES
INNOVATION

NON-CONTACT DESIGN EXTENDS SERVICE LIFE

Greatly Increased Service Life

Made possible by Tsubaki's extensive experience in mechanical power transmission, the cams used in the BR Cam Clutch offer a unique cross section that provides positive mechanical engagement only when needed. Otherwise, the Cam Clutch rotates freely with absolutely no mechanical contact in the clutch mechanism. The result is a greatly increased service life compared to conventional types.

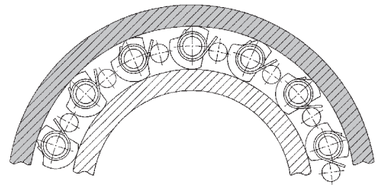

Backstop Applications with High-Speed Overrunning

When the Cam Clutch is stationary, the cam locks the inner and outer races together ***(Figure 5)***. When the inner race (load side) overruns at a high speed, the cam disengages by releasing the inner race ***(Figure 6)***. When the inner race stops, the cam rotates back into an engaged position. If the inner race tries to rotate in the reverse direction, the cams then serve as a stop between the anchored outer race and inner race to prevent reverse rotation and provide backstopping.

High-Speed and Low-Speed-Engaged Overrunning

When the Cam Clutch is stationary, the cam locks the inner and outer races together ***(Figure 5)***. When the inner race (load side) overruns at a high speed, the cam disengages by releasing from the inner race ***(Figure 6)***. When the high-speed rotation of the inner race stops and the inner race begins to rotate slowly, the cam rotates back into an engaged position. Then when you start to drive the outer race at low speed of rotation, the cams serve as a prop and drive the inner race at the same low speed of rotation. Please reference ***Figure 7***.

A More Economical Design

The open-type BR Series features a simple design in which the Cam Clutch mechanism is incorporated in a cage between standard dimension inner and outer bearing races. This allows the Cam Clutch to be easily and economically integrated into a wide variety of mechanical systems. Tsubaki also offers a package-type Cam Clutch that incorporates a bearing assembly to reduce maintenance demands.

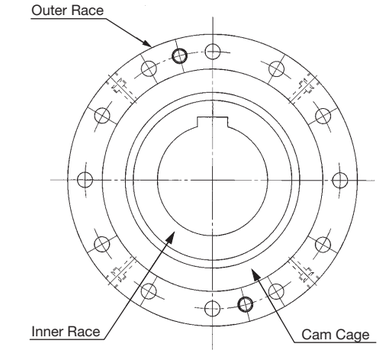

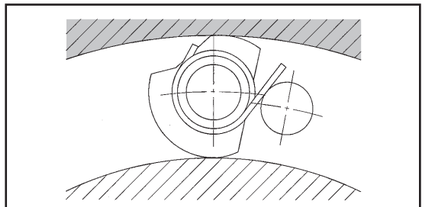

Figure 5: Entire Cam Clutch is stationary

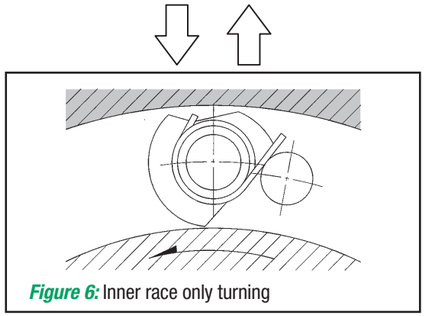

Figure 6: Inner race only turning

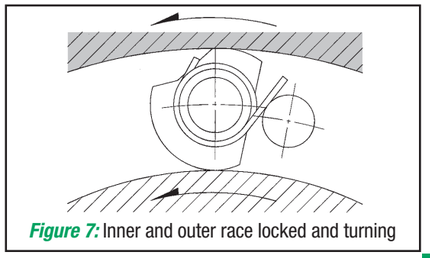

Figure 7: Inner and outer race locked and turning

Backstop Clutch Selection Guide

BACKSTOPPING TO PREVENT REVERSE ROTATION

A backstop Cam Clutch is used to prevent the rotating shaft from being driven in the reverse direction. The Cam Clutch will continue overrunning while the shaft rotates and engages to prevent reverse shaft rotation.

Normally, the inner race is mounted on the rotating shaft, and the outer race is fixed to the machine frame. The inner race overruns in normal operation. As soon as the shaft begins to rotate in the reverse direction, the cams engage with the inner and outer races to prevent reversing. ***Figure 8*** depicts a typical setup for installing a backstop Cam Clutch.

Backstop Cam Clutch Speed Grouping

Backstopping Cam Clutches are grouped into three different speed classifications that are dependant on the overrunning speed and load conditions. The following table provides the three different classifications for consideration.

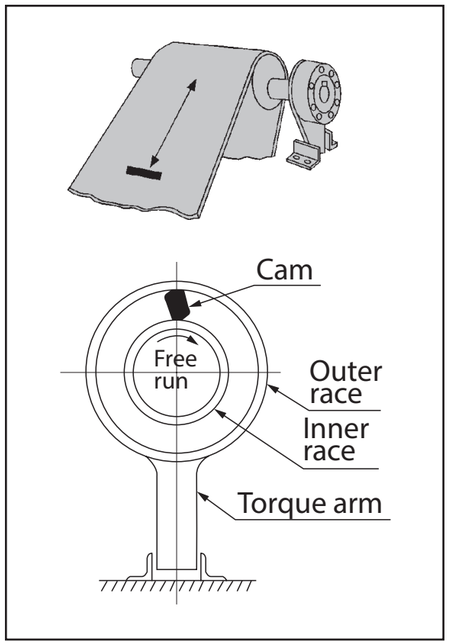

Figure 8: Typical backstop installation

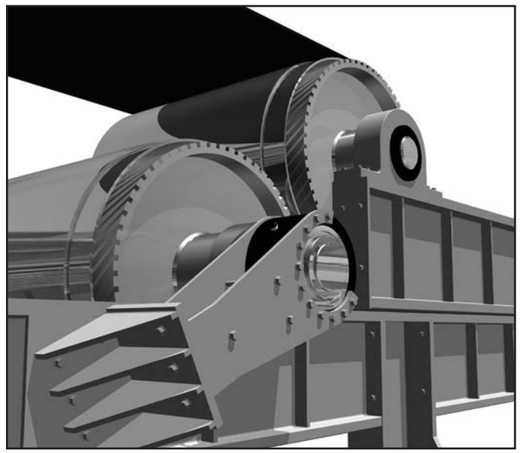



BACKSTOP CAM CLUTCH MOUNTING ORIENTATION

Preventing reverse rotation of inclined and vertical conveyor systems is one of the most common application solutions provided when implementing a backstop Cam Clutch. The following table identifies the three standard mounting types and the given series associated with each mounting type. Please reference ***Figure 9*** for a depiction of the mounting styles.

	Mounting Location Designator	Mounting Position	Common Application	Overrunning Speed (RPM) Reverse Torque	Typical Series
Backstopping	A	Pulley Shaft	Backstopping for low speed overrunning	0 - 150 RPM High Reversing Torque	BS/BS-HS BS-R
	B	Intermediate Shaft - Gear Reduction Systems	Backstopping for medium speed overrunning	150 to 700 RPM Medium Reversing Torque	MGUS/MGUS-R
	C	Directly connected to motor shaft	Backstopping for high speed overrunning	700 to 3,600 RPM Low Reversing Torque	BR-HT/BREU

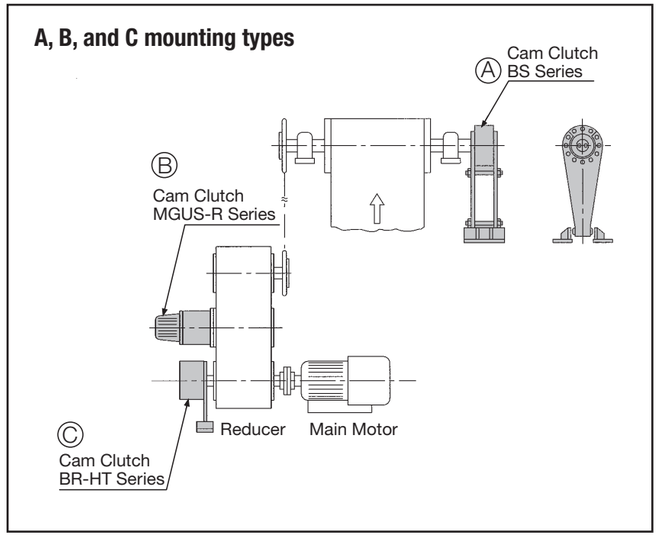

Figure 9: A,B,C backstop mounting

Backstop Clutch Selection Guide

BACKSTOPPING FOR LOW SPEED OVERRUNNING (OVERRUNNING AT 150 RPM OR LESS)

In this application, the inner race is mounted directly onto the conveyor head pulley, or driven shaft. The outer race is connected to the conveyor frame to prevent reverse rotation. Since reverse rotation is prevented directly by the conveyor shaft without using a drive chain, gears, or couplings, this is regarded as the safest and most reliable mounting method. Furthermore, due to the fact that the Cam Clutch is connected to the conveyor pulley, low overrunning slip speed is reduced, as well as the slipping distance. The result is reduced wear and long service life. In addition to conveyor systems, this system is also used to prevent reverse rotation on inclined and screw type pumps. Please see ***Figure 10*** for an illustration of mounting.

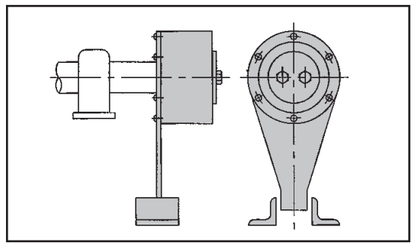

Figure 10: BS Series mounting low speed

Typical Series	Advantages
BS/BS-HS/BS-R BSEU	• Designed specifically for conveyor applications • Dust-proof enclosure • Virtually maintenance-free

BACKSTOPPING FOR MEDIUM SPEED OVERRUNNING (150 TO 700 RPM)

In this application, the Cam Clutch is mounted on a gear reducer shaft rotating at medium speeds to prevent reverse rotation. As speed increases, the torque required to maintain the load at a given rate decreases. Therefore, the Cam Clutch required only needs to withstand a comparatively small torque that is inversely proportional to the rotating speed ratio of the reducer output shaft. Considering the application requirements, even a small Cam Clutch can be utilized in this application. ***Figure 11*** provides an illustration of how the Cam Clutch could be mounted for this particular application.

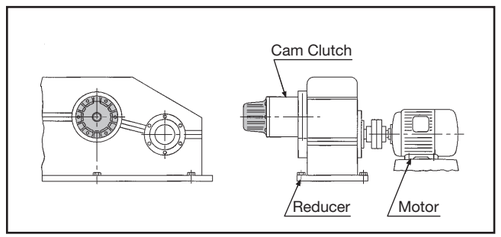

Figure 11: MGUS Series mounting medium speed

Typical Series	Advantages
MGUS/MGUS-R	• Compact design can handle high torque • Excellent wear characteristics

BACKSTOPPING FOR HIGH SPEED OVERRUNNING (OVERRUNNING AT 700 TO 3,600 RPM)

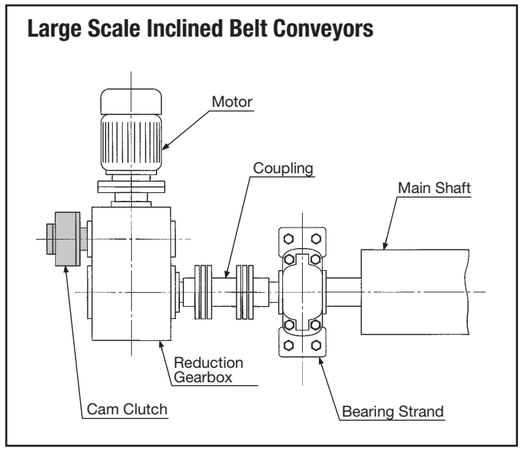

Figure 12: Cam Clutch installed on gear reducer

Inclined Belt Conveyors

In this application, the gear reducer is tasked with driving a large scale inclined conveyor system. The Cam Clutch is installed to prevent the conveyor from rolling backwards in the event of stoppage or overload. As depicted in ***Figure 12***, the Cam Clutch is mounted directly onto the reducer to prevent damage that would result due to reverse rotation.

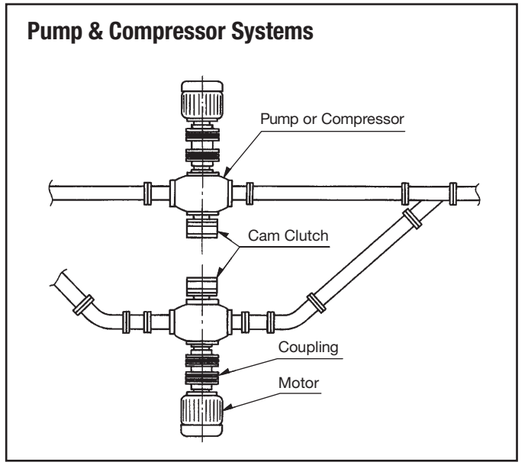

Figure 13: Cam Clutch installed on pump/compressor system

Pump/Compressor Systems

There are many applications in which multiple pump or compressor systems are feeding into the same line. These are common in applications where energy savings is required, or emergency backup/redundancy is highly desired. When the system is shut down, or another pump comes on line, there may be a tendency for a given pump to back-spin when not running. Allowing this to happen may result in damaging the pump or compressor. Installing a backstopping Cam Clutch can prevent this. Please reference ***Figure 13*** for an illustration example.

Backstop Clutch Selection Guide

INFORMATION FOR SELECTION

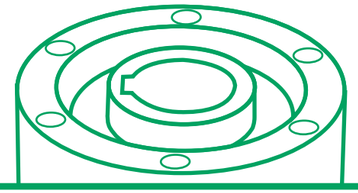

BACKSTOP SELECTION

Backstop clutches by definition are required to hold back a load from moving in a reverse direction. Care must be taken in calculating the torque requirements and should be based on maximum or worst case conditions and not averages or normally seen loads. Because the failure of a backstop or holdback clutch might result in damages, take time in considering all the possible loadings and select appropriate service factors. Below is more than one selection formula; it is generally advised to select the Cam Clutch that provides the largest safety factor.

General Selection Method:

A) Calculate the static torque reverse motion based upon the maximum load expected and multiply it by the service factor. Selection is based on the formula to the right.

B) Select the clutch by:
1) Design torque requirement
2) Maximum overrunning speed
3) Bore size and installation method

Required Torque x Service Factor = Design Torque

The torque capacity of the selected Cam Clutch must be greater than the design torque requirement, must accept the maximum overrunning speed, and be suitable for the bore and installation method required.

Motor Stall Torque Selection Method:

Another method commonly used to select the proper backstop clutch size for conveyors is to use the motor name plate ratings plus the motor's ability to produce excess torque. Depending on the motor size, it may develop over 300% of rated torque. After stalling an overloaded conveyor can overload the backstop. For proper selection of the backstop, all facets of the mechanical system should be considered to ensure that the backstop is not the weakest link in the conveyor drive. If the motor breakdown torque is not known, refer to the motor manufacturer.

Selection is based on the following formula:

$$\text{Motor stall torque T(lb.ft.)} = \frac{\text{Motor power hp} \times 5252}{\text{Shaft speed N (r/min)}} \times \frac{S}{100} \leq T_{max}$$

or

$$\text{Motor stall torque T(N•m)} = \frac{\text{Motor power kW} \times 9550}{\text{Shaft speed N (r/min)}} \times \frac{S}{100} \leq T_{max}$$

S = Stall torque percentage
Must be greater than 100% and should be obtained from motor manufacturer

T_{max} = Torque capacity of the Cam Clutch and must be greater than the motor stall torque

Select service factor from table below:

SF	Service condition
1.5	Backstopping: Several times a day
2.0	Backstopping: More than several times a day

NOTE
Always allow for the maximum possible load in your calculations, since backstopping often occurs when the conveyor is loaded above its normal loading capacity.

Bucket Elevator Selection Method:

The torque capacity of the selected Cam Clutch must be greater than the calculated torque (T), must accept the required shaft speed, and be suitable for the bore and installation method required.

Metric formula:

$$T(Nm) = \frac{9.8 \times (L + D) \times Q \times D \times 1000}{120 \times V} \times \text{Service Factor}$$

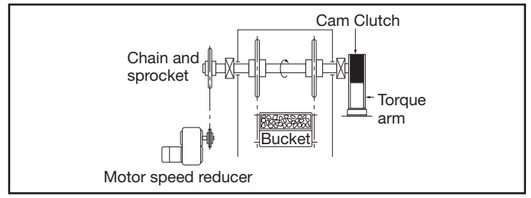

L = Total lift in meters
D = Pitch diameter of head sprocket in meters
Q = Maximum possible load in tons per hours (1 ton = 1000 kg)
V = Velocity of conveyor in meter/minute
SF = Service Factor from above chart

Belt Conveyor Selection Method:

Using these calculations, a slightly smaller Cam Clutch might be suggested because friction factors inherent in the belt conveyor are taken into consideration. Any calculations from this formula should be compared with the Motor Stall Torque Selection Method. We strongly suggest that any Cam Clutch selection be based on the larger value and choose the Cam Clutch that provides a greater safety factor. Please contact Tsubaki with any questions.

Selection Procedure:

(1) Calculate the power to move an empty belt and idlers: (P1)

$$P_1 = 0.06 \times f \times W \times V \times \frac{\ell + \ell_0}{367} \text{ (kW)}$$

(2) Calculate the power to move a loaded belt horizontally: (P2)

$$P_2 = f \times Qt \times \frac{\ell + \ell_0}{367} \text{ (kW)}$$

(3) Calculate the power to move the load vertically: (P3)

$$P_3 = \frac{h \times Qt}{367} \text{ (kW)}$$

(4) Calculate the backstop power: (Pr)

$$Pr = P_3 - 0.7(P_1 + P_2) \text{ (kW)}$$

(5) Calculate the backstop torque: (T)

$$T = \frac{9550 \times Pr}{N} \times SF \text{ (N m)}$$

(6) Select the proper clutch which satisfies the calculated backstop torque (T)

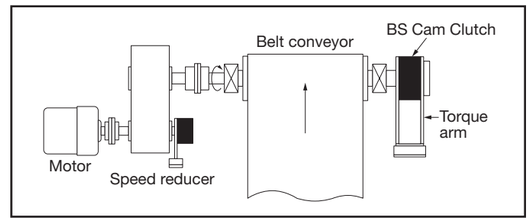

Note:
f = Friction coefficient of rollers (0.03 normally used)
h = Total lift (m)
ℓ = Horizontal distance between head pulley and tail pulley (m)
ℓ_0 = Modification coefficient for ℓ (49 m normally used)
N = Shaft speed on which the clutch is mounted – r/min
Q = Max. possible load in tons per hour (metric ton/hr.)
SF = Service factor
V = Velocity of conveyor (m/min)
W = Weight of moving parts of the conveyor in the unloaded condition (kg/m)

(W) Estimates for non-loaded belt weight (kg/m)						
Width of Belt (mm)	400	450	500	600	750	900
Estimated Weight: W	22.4	28	30	35.5	53	63

Width of Belt (mm)	1050	1200	1400	1600	1800	2000
Estimated Weight: W	80	90	112	125	150	160

HOW TO ORDER

BS-HS SERIES CAM CLUTCH

BS-HS Series Cam Clutch offers a higher strength/higher rpm option. Non-rollover cams are flanked by individual bearings on both sides. This series is identified by "HS" following the frame size number. Designed to provide inner race overrunning capability in one direction of operation, and engage the outer race when reverse rotation is experienced. Typically found on long incline conveyor systems, bucket elevators, and large pumping systems.

BS-HS Series Cam Clutch units are all manufactured on a made-to-order basis. When ordering, please specify bore size and keyway dimensions along with tolerances if available. Tsubaki includes the shaft key with your BS-HS Cam Clutch. If tolerances are not known, Tsubaki will produce per our standards. A complete Cam Clutch assembly typically includes the Cam Clutch, torque arm, shaft key, shaft end plate, and safety cover or oil reservoir. BS-HS Series Cam Clutches are pre-lubricated with grease prior to shipping.

Example How To Order Code: BS-HS Series Cam Clutch

BS	300	HS	-	10.4375"

Series	Frame Size	Descriptor	-	Available Bore Range	
BS: Backstop type	160	**HS:** High speed/ High strength	-	3.937" to 6.250"	(100 to 160 mm)
	200			3.937" to 7.875"	(100 to 200 mm)
	220			5.937" to 8.625"	(150 to 220 mm)
	250			6.875" to 9.750"	(175 to 250 mm)
	270			7.875" to 10.625"	(200 to 270 mm)
	300			9.000" to 11.750"	(230 to 300 mm)
	350			9.875" to 13.725"	(250 to 350 mm)
	425			12.750" to 16.625"	(325 to 425 mm)
	450			13.750" to 17.625"	(350 to 450 mm)
				When ordering, specify the required bore size, keyway dimensions, and special tolerance if needed.	

Specifications		
Torque Capacity lb.ft.	(Nm)	Overrunning Max. RPM
28912	(39200)	350
45507	(61700)	250
75231	(102000)	200
108421	(147000)	170
150462	(204000)	160
216843	(294000)	150
289124	(392000)	110
542107	(735000)	85
722809	(980000)	80

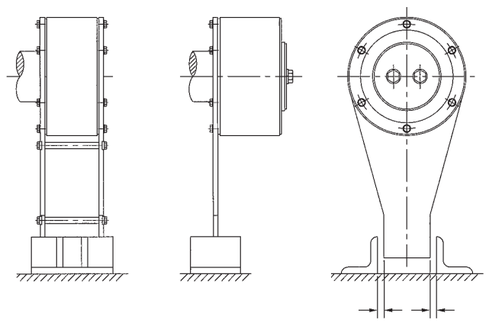

BS-HS SERIES CAM CLUTCH

BS160HS~BS270HS

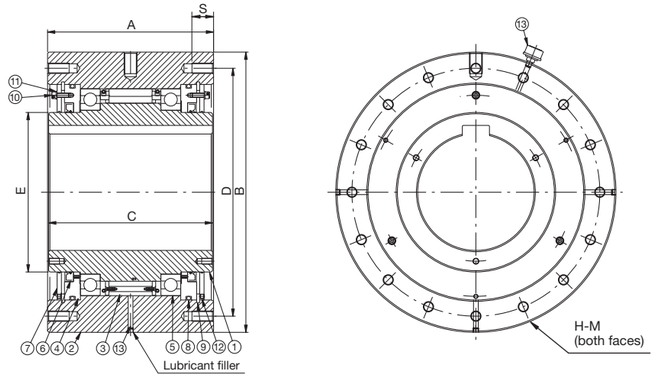

1 Inner race
2 Outer race
3 Cam cage
4 Seal supporter
5 Bearing
6 Oil seal
7 Grease fitting
8 O-ring
9 Snap ring
10 Socket bolt
11 Seal washer
12 Set screw
13 Air breather

BS300HS~BS350HS
BS425HS~BS450HS

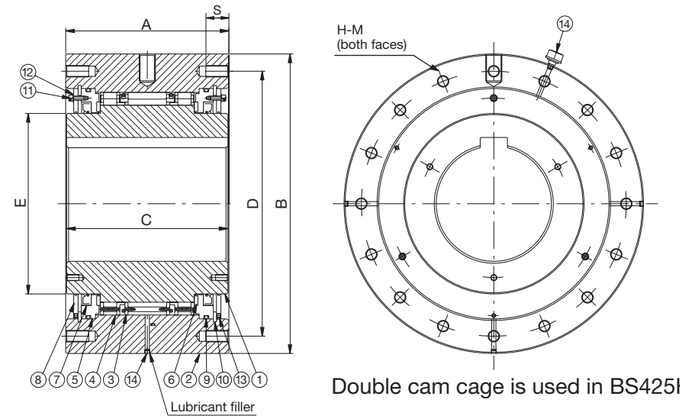

1 Inner race
2 Outer race
3 Cam cage
4 Roller cage
5 Seal supporter
6 Thrust bearing
7 Oil seal
8 Grease fitting
9 O-ring
10 Snap ring
11 Socket bolt
12 Seal washer
13 Set screw
14 Air breather

Double cam cage is used in BS425HS, BS450HS

Shaft tolerances are found on page 41.

Dimensions and Capacities

Model	Torque lb.ft. (Nm)	Inner Race Max. Overrunning Speed (RPM)	Drag Torque lb.ft. (Nm)	A in. (mm)	B in. (mm)	C in. (mm)	D PCD in. (mm)	E in. (mm)	S in. (mm)	H-M Size x Pitch No. of Tapped Holes	Grease Filler Size	Grease Quantity lbs. (kg)	Weight* lb. (kg)
BS160HS	28912 (39200)	350	25.3 (34.3)	7.1 (180)	14.2 (360)	6.9 (175)	12.402 (315)	8.7 (220)	1.6 (40)	M20 x P2.5 (10)	PT 1/4	0.5 (0.23)	264 (120)
BS200HS	45507 (61700)	250	32.5 (44.1)	8.1 (205)	16.9 (430)	7.9 (200)	14.961 (380)	10.2 (260)	1.6 (40)	M22 x P2.5 (8)	PT 1/4	0.7 (0.31)	440 (200)
BS220HS	75231 (102000)	200	54.2 (73.5)	13.0 (330)	19.7 (500)	12.8 (325)	16.535 (420)	11.4 (290)	1.6 (40)	M20 x P2.5 (16)	PT 1/4	2.9 (1.3)	858 (390)
BS250HS	108421 (147000)	170	68.7 (93.1)	14.6 (370)	23.6 (600)	14.4 (365)	20.866 (530)	13.0 (330)	2.0 (50)	M24 x P3.0 (16)	PT 1/4	3.7 (1.7)	1672 (760)
BS270HS	150462 (204000)	160	72.3 (98)	15.2 (385)	25.6 (650)	15.0 (380)	22.638 (575)	14.6 (370)	2.0 (50)	M24 x P3.0 (16)	PT 1/4	4.4 (2)	1870 (850)
BS300HS	216843 (294000)	150	79.7 (108)	16.7 (425)	30.7 (780)	16.5 (420)	27.165 (690)	18.5 (470)	2.4 (60)	M30 x P3.5 (16)	PT 1/4	7.9 (3.6)	3080 (1400)
BS350HS	289124 (392000)	110	116 (157)	17.3 (440)	36.6 (930)	18.9 (480)	32.087 (815)	21.1 (535)	2.8 (70)	M36 x P4.0 (16)	PT 1/4	9.0 (4.1)	5060 (2300)
BS425HS	542107 (735000)	85	159 (216)	22.4 (570)	40.6 (1030)	22.8 (580)	37.008 (940)	25.0 (635)	2.8 (70)	M36 x P4.0 (18)	PT 1/4	15.2 (6.9)	7260 (3300)
BS450HS	722809 (980000)	80	181 (245)	22.4 (570)	42.9 (1090)	23.6 (600)	38.976 (990)	25.4 (645)	3.1 (80)	M42 x P4.5 (18)	PT 1/4	15.8 (7.2)	8140 (3700)

* Listed weight is for Cam Clutch with smallest bore. This is max. possible weight.

HOW TO ORDER

BS SERIES CAM CLUTCH

BS Series Cam Clutch products are designed to provide inner race overrunning capability in one direction of operation, and engage the outer race when reverse rotation is experienced. BS Series units are often found on incline conveyor systems, or pump systems that may experience reverse rotation due to excessive loading on the discharge side of the pump. BS Series Cam Clutches are a cam and roller design incorporating the low friction bearing into the cam cage.



A complete Cam Clutch assembly typically includes the Cam Clutch, torque arm, shaft key, shaft end plate, and safety cover or oil reservoir. The shaft key is included with the Cam Clutch but please select each additional item individually as needed. Grease lubrication is standard for BS30 through BS350 Cam Clutches. Size BS425 and BS450 use oil lubrication.

How To Order: For the BS Series Cam Clutch that is needed, please specify the series, frame size, and bore size. If the bore size needed is not specified or if different key dimensions are required, please contact Tsubaki. Made-to-order Cam Clutches are readily available.

Series	Frame Size	-	Available Bore Range	Full Description
BS	30	-	1	**BS30 Cam Clutch with 1.000" bore including 1/4" wide key**

BS Series Cam Clutch Product Overview

Series	Frame Size	-	Available Bore Range	
BS: Backstop Cam Clutch	30	-	0.750" to 1.181"	(20 to 30 mm)
	50		1.125" to 2.000"	(28.58 to 50.8 mm)
	65		1.500" to 2.559"	(38.1 to 65 mm)
	75		1.938" to 2.953"	(49.2 to 75 mm)
	85		2.362" to 3.346"	(60 to 85 mm)
	95		2.250" to 3.740"	(57.15 to 95 mm)
	110		2.437" to 4.331"	(61.9 to 110 mm)
	135		2.937" to 5.315"	(74.6 to 135 mm)
	160		3.937" to 6.250"	(100 to 160 mm)
	200		3.937" to 7.875"	(100 to 200 mm)
	220		5.937" to 8.625"	(150 to 220 mm)
	250		6.875" to 9.750"	(175 to 250 mm)
	270		7.875" to 10.625"	(200 to 270 mm)
	300		9.000" to 11.750"	(230 to 300 mm)
	335		9.875" to 11.750"	(250 to 300 mm)
	350		9.875" to 13.725"	(250 to 350 mm)
	425		12.750" to 16.625"	(325 to 425 mm)
	450		13.750" to 17.625"	(350 to 450 mm)

Specifications		
Torque Capacity		Overrunning
lb.ft.	(Nm)	Max. RPM
217	(294)	350
578	(784)	300
1158	(1570)	340
1807	(2450)	300
4337	(5880)	300
5782	(7840)	250
7966	(10800)	250
11580	(15700)	200
18070	(24500)	100
27437	(37200)	100
36140	(49000)	80
65053	(88200)	50
90720	(123000)	50
129811	(176000)	50
195453	(265000)	50
231594	(314000)	50
376156	(510000)	50
505966	(686000)	50

BS30 - BS75 SERIES CAM CLUTCH

Example How To Order Code: BS Series Cam Clutch

BS	30	-	1B

Series	Frame Size	-	Bore Symbol
BS: Backstop Cam Clutch	30	-	L
			P
			1
			1B
			30
	50		1D
			1F
			1G
			1H
			1J
			1L
			45
			1P
			50
			2
	65		1H
			40
			1J
			1L
			45
			1P
			50
			2
			2B
			55
			2D
			60
			2G
			2H
			65
	75		1R
			2
			2B
			2D
			60
			2G
			2H
			65
			2J
			2L
			70
			2P
			2R
			75

The bore sizes listed below are standards.
Special bore and keyway sizes are available upon request.

Specifications				
Bore Size		Bore	Torque Capacity	
inch	(mm)	Keyseat	lb.ft.	(Nm)
0.750	(19.05)	3/16 x 3/32"		
0.875	(22.23)	3/16 x 3/32"		
1.000	(25.40)	1/4 x 1/8"	217	(294)
1.125	(28.58)	1/4 x 1/8"		
1.181	(30)	8 x 3.3 mm		
1.250	(31.75)	1/4 x 1/8"		
1.375	(34.93)	5/16 x 5/32"		
1.438	(36.51)	3/8 x 3/16"		
1.500	(38.10)	3/8 x 3/16"		
1.625	(41.28)	3/8 x 3/16"		
1.750	(44.45)	3/8 x 3/16"	578	(784)
1.771	(45)	14 x 3.8 mm		
1.875	(47.63)	1/2 x 1/4"		
1.968	(50)	14 x 3.8 mm		
2.000	(50.80)	1/2 x 1/4"		
1.500	(38.10)	3/8 x 3/16"		
1.575	(40)	12 x 3.3 mm		
1.625	(41.28)	3/8 x 3/16"		
1.750	(44.45)	3/8 x 3/16"		
1.771	(45)	14 x 3.8 mm		
1.875	(47.63)	1/2 x 1/4"		
1.969	(50)	14 x 3.8 mm		
2.000	(50.80)	1/2 x 1/4"	1158	(1570)
2.125	(53.98)	1/2 x 1/4"		
2.165	(55)	16 x 4.3 mm		
2.250	(57.15)	1/2 x 1/4"		
2.362	(60)	18 x 4.4 mm		
2.438	(61.91)	5/8 X 5/16"		
2.500	(63.50)	5/8 X 5/16"		
2.559	(65)	18 x 4.4 mm		
1.938	(49.2)	1/2 x 1/4"		
2.000	(50.8)	1/2 x 1/4"		
2.125	(53.98)	1/2 x 1/4"		
2.250	(57.15)	1/2 x 1/4"		
2.362	(60)	18 x 4.4 mm		
2.438	(61.91)	5/8 x 5/16"		
2.500	(63.50)	5/8 x 5/16"	1807	(2450)
2.559	(65)	18 x 4.4 mm		
2.625	(66.68)	5/8 x 5/16"		
2.750	(69.85)	5/8 x 5/16"		
2.755	(70)	20 x 4.9 mm		
2.875	(73.03)	3/4 x 3/8"		
2.938	(74.61)	3/4 x 3/8"		
2.952	(75)	20 x 4.9 mm		

BS85 - BS135 SERIES CAM CLUTCH

Example How To Order Code: BS Series Cam Clutch

BS	85	-	75
Series	Frame Size	-	Bore Symbol

Series	Frame Size	-	Bore Symbol
BS: Backstop type	85	-	2F
			2G
			2H
			2J
			2L
			70
			2P
			2R
			75
			3
			3B
			80
			3D
			85
	95	-	2D
			2F
			2G
			2H
			2J
			2L
			2P
			2R
			3
			3B
			80
			3D
			85
			3G
			90
			95
	110	-	2G
			2H
			2J
			2L
			2R
			3
			3B
			3D
			85
			3G
			3H
			90
			3J
			95
			3L
			3P
			3R
			4
			105
			4D
			110

The bore sizes listed below are standards.
Special bore and keyway sizes are available upon request.

Specifications				
Bore Size		Bore Keyseat	Torque Capacity	
inch	(mm)		lb.ft.	(Nm)
2.375	(60.33)	5/8 x 5/16"		
2.438	(61.91)	5/8 x 5/16"		
2.500	(63.50)	5/8 x 5/16"		
2.625	(66.68)	5/8 x 5/16"		
2.750	(69.85)	5/8 x 5/16"		
2.755	(70)	20 x 4.9 mm		
2.875	(73.03	3/4 x 3/8"		
2.938	(74.61)	3/4 x 3/8"	4337	(5880)
2.952	(75)	20 x 4.9 mm		
3.000	(76.20)	3/4 x 3/8"		
3.125	(79.38)	3/4 x 3/8"		
3.149	(80)	22 x 5.4 mm		
3.250	(82.55)	3/4 x 3/8"		
3.346	(85)	22 x 5.4 mm		
2.250	(57.15)	1/2 x 1/4"		
2.375	(60.33)	5/8 x 5/16"		
2.438	(61.91)	5/8 x 5/16"		
2.500	(63.50)	5/8 x 5/16"		
2.625	(66.68)	5/8 x 5/16"		
2.750	(69.85)	5/8 x 5/16"		
2.875	(73.03	3/4 x 3/8"		
2.938	(74.61)	3/4 x 3/8"	5782	(7840)
3.000	(76.20)	3/4 x 3/8"		
3.125	(79.38)	3/4 x 3/8"		
3.149	(80)	22 x 5.4 mm		
3.250	(82.55)	3/4 x 3/8"		
3.346	(85)	22 x 5.4 mm		
3.438	(87.31)	7/8 x 7/16"		
3.543	(90)	25 x 5.4 mm		
3.740	(95)	25 x 5.4 mm		
2.438	(61.91)	5/8 x 5/16"		
2.500	(63.50)	5/8 x 5/16"		
2.625	(66.68)	5/8 x 5/16"		
2.750	(69.85)	5/8 x 5/16"		
2.938	(74.61)	3/4 x 3/8"		
3.000	((76.2)	3/4 x 3/8"		
3.125	(79.38)	3/4 x 3/8"		
3.250	(82.55)	3/4 x 3/8"		
3.346	(85)	22 x 5.4 mm		
3.438	(87.31)	7/8 x 7/16"		
3.500	(88.90)	7/8 x 7/16"	7966	(10800)
3.543	(90)	25 x 5.4 mm		
3.625	(92.08)	7/8 x 7/16"		
3.740	(95)	25 x 5.4 mm		
3.750	(95.25)	7/8 x 7/16"		
3.875	(98.43)	1 x 1/2"		
3.938	(100.01)	1 x 1/2"		
4	(101.60)	1 x 1/2"		
4.134	(105)	28 x 6.4 mm		
4.250	(107.95)	1 x 1/2"		
4.330	(110)	28 x 6.4 mm		

BS135 - BS450 SERIES CAM CLUTCH

Example How To Order Code: BS Series Cam Clutch

BS	135	-	4
Series	Frame Size	-	Bore Symbol

Series	Frame Size	-	Bore Symbol
BS: Backstop type	135	-	2R
			3
			3B
			3D
			3G
			3H
			3J
			3L
			3P
			3R
			4
			105
			4D
			110
			4G
			4H
			4L
			4R
			5
			5D
			135
	160	-	MTO Bore size is made-to-order, please specify bore and keyway requirement
	200		
	220		
	250		
	270		
	300		
	335		
	350		
	425		
	450		

The bore sizes listed below are standards.
Special bore and keyway sizes are available upon request.

Specifications				
Bore Size		Bore Keyseat	Torque Capacity	
inch	(mm)		lb.ft.	(Nm)
2.938	(74.61)	3/4 x 3/8"		
3.000	(76.20)	3/4 x 3/8"		
3.125	(79.38)	3/4 x 3/8"		
3.250	(82.55)	3/4 x 3/8"		
3.438	(87.31)	7/8 x 7/16"		
3.500	(88.90)	7/8 x 7/16"		
3.625	(92.08)	7/8 x 7/16"		
3.750	(95.25)	7/8 x 7/16"		
3.875	(98.43)	1 x 1/2"		
3.938	(100.01)	1 x 1/2"		
4.000	(101.60)	1 x 1/2"	11580	(15700)
4.134	(105)	28 x 6.4 mm		
4.250	(107.95)	1 x 1/2"		
4.330	(110)	28 x 6.4 mm		
4.438	(112.72)	1 x 1/2"		
4.500	(114.30)	1 x 1/2"		
4.750	(120.65)	1-1/4 x 5/8"		
4.938	(125.43)	1-1/4 x 5/8"		
5.000	(127)	1-1/4 x 5/8"		
5.250	(133.35)	1-1/4 x 5/8"		
5.315	(135)	36 x 8.4 mm		
3.937" to 6.250"			18070	(24500)
3.937" to 7.875"			27437	(37200)
5.937" to 8.625"			36140	(49000)
6.875" to 9.750"			65053	(88200)
7.875" to 10.625"			90720	(123000)
9.000" to 11.750"			129811	(176000)
9.875" to 11.750"			195453	(265000)
9.875" to 13.725"			231594	(314000)
12.750" to 16.625"			376156	(510000)
13.750" to 17.625"			505966	(686000)

BS30 - BS135 SERIES DIMENSIONS

BS30~135

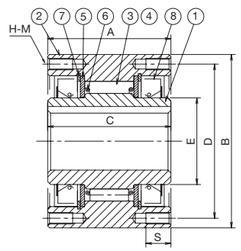

BS30 to BS50

1 Inner race	5 Plate
2 Outer race	6 Spring
3 Cam	7 Spirolox
4 Roller	8 Oil seal

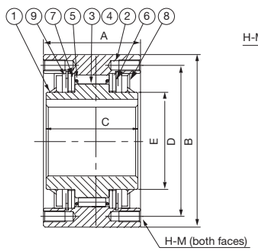

BS65 to BS75

1 Inner race	6 Plate
2 Outer race	7 Thrust metal
3 Cam	8 Oil seal
4 Roller	9 Spirolox
5 Spring	

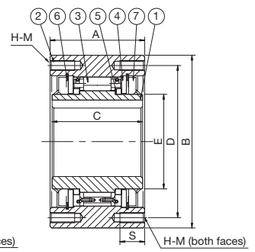

BS85 to BS135

1 Inner race	5 Thrust metal
2 Outer race	6 Spirolox
3 Cam cage	7 Oil seal
4 Plate	

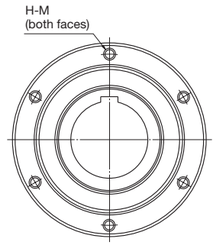

Shaft tolerances are found on page 41.

Dimensions and Capacities

Model	Torque lb.ft. (Nm)	Inner Race Max. Overrunning Speed (RPM)	Drag Torque lb.ft. (Nm)	A in. (mm)	B in. (mm)	C in. (mm)	D PCD in. (mm)	E in. (mm)	S in. (mm)	H-M Size x Pitch No. of Tapped Holes	Weight* lb. (kg)
BS30	217	350	0.43	2.520	3.543	2.520	3.150	1.772	0.512	M6 XP1.0 (4)	5.1
	(294)		(0.58)	(64)	(90)	(64)	(80)	(45)	(13)		(2.3)
BS50	578	300	0.72	2.638	4.921	2.638	4.331	2.756	0.630	M8 x P1.25 (4)	10.3
	(784)		(0.98)	(67)	(125)	(67)	(110)	(70)	(16)		(4.7)
BS65	1158	340	2.89	3.543	6.299	3.346	5.512	3.543	0.787	M10 x P1.5 (6)	28.6
	(1570)		(3.92)	(90)	(160)	(85)	(140)	(90)	(20)		(13)
BS75	1807	300	4.34	3.543	6.693	3.346	5.906	3.937	0.787	M10 x P1.5 (6)	32.3
	(2450)		(5.88)	(90)	(170)	(85)	(150)	(100)	(20)		(14.7)
BS85	4337	300	5.78	4.528	8.268	4.331	7.283	4.528	1.181	M12 x P1.75 (6)	59.8
	(5880)		(7.84)	(115)	(210)	(110)	(185)	(115)	(30)		(27.2)
BS95	5782	250	7.23	4.528	9.055	4.331	7.874	5.118	1.181	M14 x P2.0 (6)	70.8
	(7840)		(9.8)	(115)	(230)	(110)	(200)	(130)	(30)		(32.2)
BS110	7966	250	10.84	4.528	10.630	4.331	8.661	5.906	1.181	M16 x P2.0 (6)	84.9
	(10800)		(14.7)	(115)	(270)	(110)	(220)	(150)	(30)		(38.6)
BS135	11580	200	14.46	5.315	12.598	5.118	11.024	7.087	1.181	M16 x P2.0 (8)	167.4
	(15700)		(19.6)	(135)	(320)	(130)	(280)	(180)	(30)		(76.1)

* Listed weight is for Cam Clutch with smallest bore. This is max. possible weight.

Chamfer of the Bore End Faces

Shaft Diameter		Chamfer	
Under 2"	(Under 50 mm)	0.06"	(1.5 mm)
2" thru 4-15/16"	(50 to 125 mm)	0.08"	(2 mm)
4-15/16" thru 11-7/32"	(125 to 285 mm)	0.12"	(3 mm)

BS160 - BS450 SERIES CAM CLUTCH

BS160 to BS220

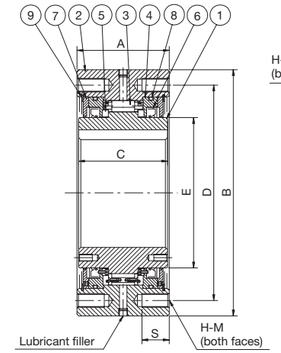

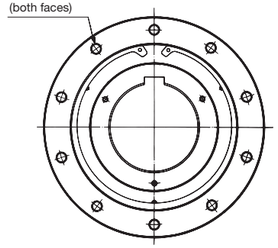

1 Inner race	6 Oil seal
2 Outer race	7 Grease fitting
3 Cam cage	8 O-ring
4 Seal supporter	9 Snap ring
5 Thrust metal	

BS250 to BS450

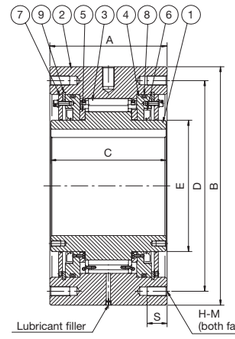

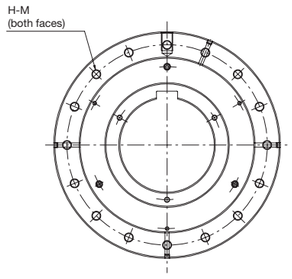

1 Inner race	6 Oil seal
2 Outer race	7 Grease fitting
3 Cam cage	8 O-ring
4 Seal supporter	9 Snap ring
5 Thrust metal	

Shaft tolerances are found on page 41.

Dimensions and Capacities

Model	Torque lb.ft. (Nm)	Inner Race Max. Overrunning Speed (RPM)	Drag Torque lb.ft. (Nm)	A in. (mm)	B in. (mm)	C in. (mm)	D PCD in. (mm)	E in. (mm)	S in. (mm)	H-M Size x Pitch No. of Tapped Holes	Grease Filler Size	Grease Quantity lbs. (kg)	Weight * lb. (kg)
BS160	18070	100	25	5.315	14.173	5.118	12.402	8.661	1.575	M20 x P2.5 (10)	PT 1/4	0.26	216
	(24500)		(34.3)	(135)	(360)	(130)	(315)	(220)	(40)			(0.12)	(98.1)
BS200	27437	100	33	5.906	16.929	5.709	14.961	10.433	1.575	M22 x P2.5 (8)	PT 1/4	0.31	367
	(37200)		(44.1)	(150)	(430)	(145)	(380)	(265)	(40)			(0.14)	(167)
BS220	36140	80	54	9.252	19.685	9.055	16.535	11.417	1.575	M20 x P2.5 (16)	PT 1/4	1.76	662
	(49000)		(73.5)	(235)	(500)	(230)	(420)	(290)	(40)			(0.8)	(301)
BS250	65053	50	69	11.614	23.622	11.417	20.866	12.992	1.969	M24 x P3.0 (16)	PT 1/4	2.42	1276
	(88200)		(93.1)	(295)	(600)	(290)	(530)	(330)	(50)			(1.1)	(580)
BS270	90720	50	72	11.614	25.591	11.417	22.638	14.567	1.969	M24 x P3.0 (16)	PT 1/4	2.64	2112
	(123000)		(98)	(295)	(650)	(290)	(575)	(370)	(50)			(1.2)	(640)
BS300	129811	50	80	11.614	30.709	11.417	27.165	18.504	2.362	M30 x P3.5 (16)	PT 1/4	2.86	2094
	(176000)		(108)	(295)	(780)	(290)	(690)	(470)	(60)			(1.3)	(952)
BS335	195453	50	101	12.008	33.465	12.598	29.528	19.488	2.756	M36 x P4.0 (16)	PT 1/4	3.08	2508
	(265000)		(137)	(305)	(850)	(320)	(750)	(495)	(70)			(1.4)	(1140)
BS350	231594	50	116	12.598	36.614	14.173	32.087	21.063	2.756	M36 x P4.0 (16)	PT 1/4	3.30	3520
	(314000)		(157)	(320)	(930)	(360)	(815)	(535)	(70)			(1.5)	(1600)
BS425	376156	50	159	17.323	40.551	17.717	37.008	25.000	2.756	M36 x P4.0 (18)	-	Oil: 6000 ml	5280
	(510000)		(216)	(440)	(1030)	(450)	(940)	(635)	(70)				(2400)
BS450	505966	50	181	17.717	42.913	18.898	38.976	25.394	3.150	M42 x P4.5 (18)	-	Oil: 7000 ml	6204
	(686000)		(245)	(450)	(1090)	(480)	(990)	(645)	(80)				(2820)

* Listed weight is for Cam Clutch with smallest bore. This is max. possible weight.

Chamfer of the Bore End Faces

Shaft Diameter		Chamfer	
2" thru 4-15/16"	(50 to 125 mm)	0.08"	(2 mm)
4-15/16" thru 11-7/32"	(125 to 285 mm)	0.12"	(3 mm)
Over 11-7/32"	(Over 285 mm)	0.20"	(5 mm)

HOW TO ORDER

BS-R SERIES CAM CLUTCH

BS-R Series Cam Clutch is used in applications that require continuous oil lubrication due to the environment or the duty cycle. The addition of an oil reservoir also offers easy lubrication maintenance. The torque capacities and max. overrunning rpm are the same as the standard BS Series Cam Clutch however, the added oil capacity helps to lower heat buildup which can extend the life of the Cam Clutch. When ordering an Oil Reservoir style Cam Clutch, the "R" which denotes the reservoir is inserted between the Cam Clutch frame size and the bore size as illustrated below.

Example How To Order Code: BS-R Series Cam Clutch

BS	200	R	-	4.437

Series	Frame Size	Reservoir	-	Available Bore Range	
BS: Backstop type	160	**R:** Oil reservoir	-	3.937" to 6.250"	(100 to 160 mm)
	200			3.937" to 7.875"	(100 to 200 mm)
	220			5.937" to 8.625"	(150 to 220 mm)
	250			6.875" to 9.750"	(175 to 250 mm)
	270			7.875" to 10.625"	(200 to 270 mm)
	300			9.000" to 11.750"	(230 to 300 mm)
	335			9.875" to 11.750"	(250 to 300 mm)
	350			9.875" to 13.725"	(250 to 350 mm)
	425			12.750" to 16.625"	(325 to 425 mm)
	450			13.750" to 17.625"	(350 to 450 mm)
				When ordering, specify the required bore size, keyway dimensions, and special tolerance if needed.	

Specifications		
Torque Capacity lb.ft.	(Nm)	Overrunning Max. RPM
18070	(24500)	100
27437	(37200)	100
36140	(49000)	80
65053	(88200)	50
90720	(123000)	50
129811	(176000)	50
195453	(265000)	50
231594	(314000)	50
376156	(510000)	50
505966	(686000)	50

Additional important requirements when ordering a BS-R oil reservoir style Cam Clutch

An end plate is used to fix the Cam Clutch onto the shaft and help contain the oil within the reservoir. To assist, Tsubaki provides this end plate but dimensions of the shaft end are required from the customer. The required dimensions are detailed on the following pages. Below is an example to further explain.

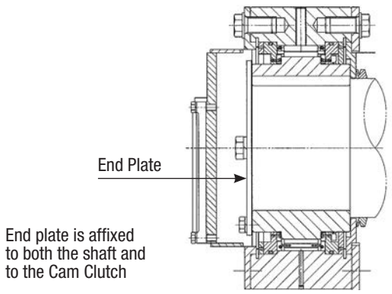

End plate is affixed to both the shaft and to the Cam Clutch

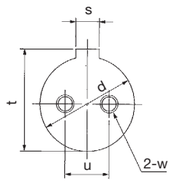

Dimensions detailing the end of the shaft are required so that Tsubaki can supply a matching plate

BS65R - BS135R SERIES DIMENSIONS

1 Inner race
2 Outer race
3 Cam cage
4 Seal supporter
5 Spacer
6 Thrust metal
7 Torque arm
8 Oil reservoir
9 Stop plate
10 Packing (A)
11 Dust seal
12 O-ring
14 Spiro lox
15 Oil gauge
16 Plug
17 Packing (B)
18 Hexagon bolt
19 Hexagon bolt
20 Hexagon bolt
21 Seal washer
22 Spring washer
23 Spring washer
24 Machine screw
25 Hexagon bolt

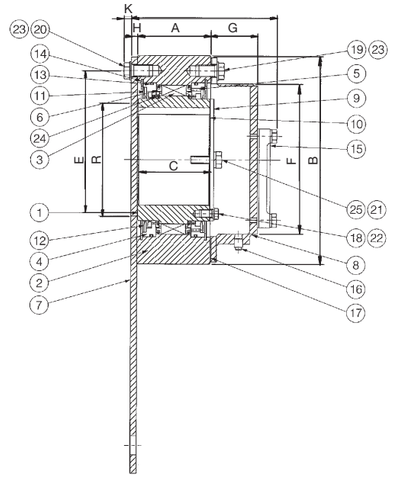

Please specify direction of shaft rotation viewed from this end: clockwise or counter-clockwise (RH, LH)

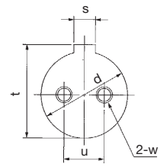

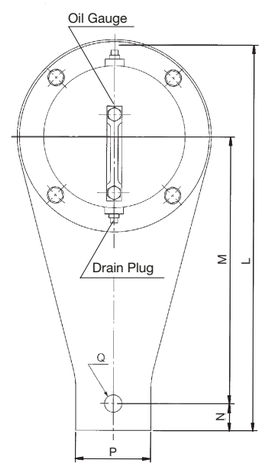

When ordering the Oil Reservoir type Cam Clutch, please specify the requested data below:

d	Bore diameter	w	Size of tapped holes
s	Keyway width	a	Angle relation between center of keyway and tapped holes
t	Keyway height	CW/CCW	Clockwise/counterclockwise shaft rotation direction when looking at Cam Clutch
u	Distance between tapped holes	W	

Shaft tolerances are found on page 41.

Dimensions and Capacities

Model	A in. (mm)	B in. (mm)	C in. (mm)	E (PCD) in. (mm)	F in. (mm)	G in. (mm)	H in. (mm)	K in. (mm)	L in. (mm)	M in. (mm)	N in. (mm)	P in. (mm)	Q in. (mm)	R in. (mm)
BS65 R	3.543 (90)	6.299 (160)	3.346 (85)	5.512 (140)	4.528 (115)	1.969 (50)	0.236 (6)	0.374 (9.5)	12.047 (306)	8.268 (210)	0.630 (16)	1.969 (50)	0.531 (13.5)	3.543 (90)
BS75 R	3.543 (90)	6.693 (170)	3.346 (85)	5.906 (150)	4.921 (125)	1.969 (50)	0.236 (6)	0.374 (9.5)	13.937 (354)	9.843 (250)	0.748 (19)	2.559 (65)	0.650 (16.5)	3.937 (100)
BS85 R	4.528 (115)	8.268 (210)	4.331 (110)	7.283 (185)	5.512 (140)	2.362 (60)	0.354 (9)	0.433 (11)	17.087 (434)	11.811 (300)	1.142 (29)	3.740 (95)	0.807 (20.5)	4.528 (115)
BS95 R	4.528 (115)	9.055 (230)	4.331 (110)	7.874 (200)	6.299 (160)	2.362 (60)	0.354 (9)	0.492 (12.5)	19.567 (497)	13.780 (350)	1.260 (32)	4.134 (105)	0.807 (20.5)	5.118 (130)
BS110 R	4.528 (115)	10.630 (270)	4.331 (110)	8.661 (220)	7.087 (180)	2.362 (60)	0.472 (12)	0.551 (14)	22.047 (560)	15.157 (385)	1.575 (40)	4.331 (110)	1.024 (26)	5.512 (140)
BS135 R	5.315 (135)	12.598 (320)	5.118 (130)	11.024 (280)	9.055 (230)	2.362 (60)	0.472 (12)	0.551 (14)	26.220 (666)	18.504 (470)	1.417 (36)	4.724 (120)	1.024 (26)	7.087 (180)

Dimensions and Capacities

Model	Mounting Bolt Size - Quantity		Stop Plate Bolt* Size - Quantity	Oil Capacity		Max. Weight	
	Torque Arm Side	Reservoir Side		oz.	(ml)	lb.	(kg)
BS65 R	M10 x 25 (6)	M10 x 20 (3)	M6 x 20 (3 + 2)	8.5	(250)	34.8	(15.8)
BS75 R	M10 x 25 (6)	M10 x 20 (3)	M6 x 20 (3 + 2)	10.1	(300)	36.3	(16.5)
BS85 R	M12 x 30 (6)	M12 x 25 (3)	M6 x 25 (3 + 2)	15.2	(450)	69.1	(31.4)
BS95 R	M14 x 35 (6)	M14 x 30 (3)	M6 x 25 (3 + 2)	20.3	(600)	83.8	(38.1)
BS110 R	M16 x 40 (6)	M16 x 35 (3)	M8 x 25 (3 + 2)	25.4	(750)	103.2	(46.9)
BS135 R	M16 x 35 (8)	M16 x 35 (4)	M10 x 30 (3 + 2)	44	(1300)	189.6	(86.2)

* This bolt size and quantity are the bolts supplied by Tsubaki to attach the stop plate to the tapped holes on the inner race of the Cam Clutch. Other bolts, usually two, are required to attach the Stop Plate to the end of the customer's shaft. These two bolts to attach to customer's shaft are furnished by the customer.

BS160R - BS200R SERIES DIMENSIONS

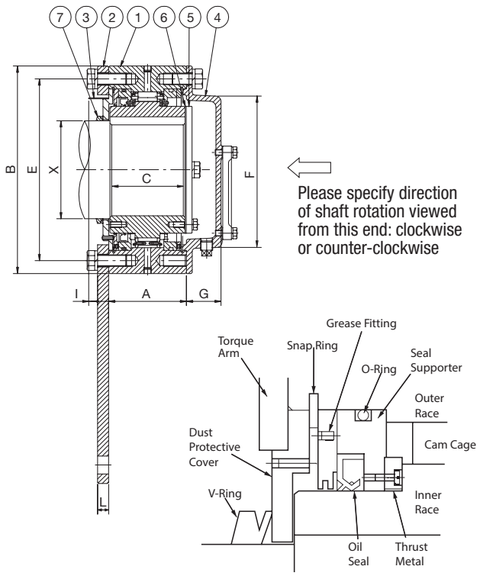

Please specify direction of shaft rotation viewed from this end: clockwise or counter-clockwise

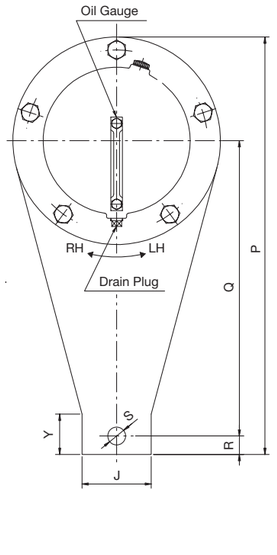

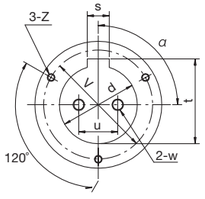

BS160R/BS200R
Shaft end view

1 BS Cam Clutch
2 Torque arm
3 Dust preventive cover
4 Oil reservoir
5 End plate
6 Packing
7 V-ring

When ordering the Oil Reservoir type Cam Clutch, please specify the requested data below:

d	Bore diameter	w	Size of tapped holes
s	Keyway width	a	Angle relation between center of keyway and tapped holes
t	Keyway height	CW/CCW	Clockwise/counterclockwise shaft rotation direction when looking at Cam Clutch
u	Distance between tapped holes		

Shaft tolerances are found on page 41.

Dimensions and Capacities

Model	A in. (mm)	B in. (mm)	C in. (mm)	E (PCD) in. (mm)	F in. (mm)	G in. (mm)	L in. (mm)	I in. (mm)	J in. (mm)	R in. (mm)	P in. (mm)	Q in. (mm)
B160 R	5.315	14.173	5.118	12.402	10.039	2.362	0.748	0.630	4.724	1.260	31.181	22.835
	(135)	(360)	(130)	(315)	(255)	(60)	(19)	(16)	(120)	(32)	(792)	(580)
BS200 R	5.906	16.929	5.709	14.961	12.205	2.362	0.748	0.827	5.118	1.693	32.992	24.528
	(150)	(430)	(145)	(380)	(310)	(60)	(19)	(21)	(130)	(43)	(838)	(623)

Dimensions and Capacities

Model	S in. (mm)	V in. (mm)	Y in. (mm)	Z in. (mm)	Mounting Bolt Size - Quantity		Oil Capacity		Max. Weight	
					Torque Arm Side	Reservoir Side	oz.	(ml)	lb.	(kg)
B160 R	1.220	7.480	2.559	M10	M20 x 55 (10)	M20 x 40 (5)	44	(1300)	238	(108)
	(31)	(190)	(65)							
BS200 R	1.614	9.252	2.756	M12	M22 x 60 (8)	M22 x 40 (4)	64.2	(1900)	400	(182)
	(41)	(235)	(70)							

BS220R - BS450R SERIES DIMENSIONS

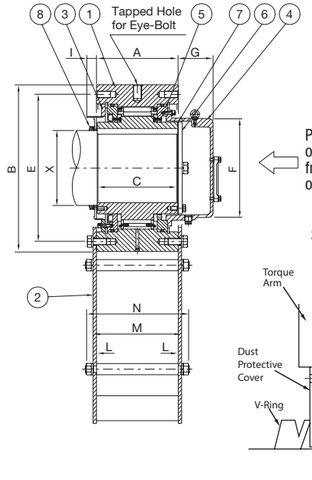

Please specify direction of shaft rotation viewed from this end: clockwise or counter-clockwise

SEALING DETAILS

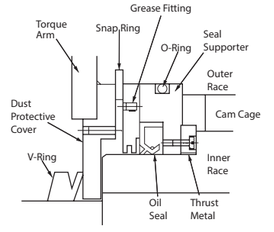

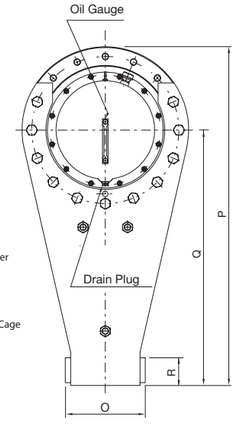

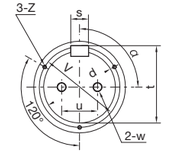

BS220R/BS270R
Shaft end view

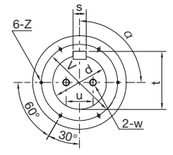

BS300R/BS450R
Shaft end view

1 BS Cam Clutch
2 Torque arm
3 Dust preventive cover
4 Oil reservoir
5 Seal Supporter
6 End plate
7 Packing
8 V-ring

Shaft tolerances are found on page 41.

Dimensions and Capacities

Model	A in. (mm)	B in. (mm)	C in. (mm)	E (PCD) in. (mm)	F in. (mm)	G in. (mm)	I in. (mm)	L in. (mm)	M in. (mm)	N in. (mm)	O in. (mm)	P in. (mm)
B220 R	9.252	19.685	9.055	16.535	11.654	3.740	1.378	0.472	10.197	12.244	9.370	42.126
	(235)	(500)	(230)	(420)	(296)	(95)	(35)	(12)	(259)	(311)	(238)	(1070)
BS250 R	11.614	23.622	11.417	20.866	13.976	4.921	1.378	0.472	12.559	14.764	11.339	51.181
	(295)	(600)	(290)	(530)	(355)	(125)	(35)	(12)	(319)	(375)	(288)	(1300)
BS270 R	11.614	25.591	11.417	22.638	15.551	5.118	1.575	0.472	12.559	14.764	11.732	56.102
	(295)	(650)	(290)	(575)	(395)	(130)	(40)	(12)	(319)	(375)	(298)	(1425)
B300 R	11.614	30.709	11.417	27.165	19.488	5.118	1.772	0.748	13.110	15.591	14.016	66.535
	(295)	(780)	(290)	(690)	(495)	(130)	(45)	(19)	(333)	(396)	(356)	(1690)
BS335 R	12.008	33.465	12.598	29.528	20.669	5.315	2.362	3.543	13.504	15.945	15.197	75.787
	(305)	(850)	(320)	(750)	(525)	(135)	(60)	(9)	(343)	(405)	(386)	(1925)
B350 R	12.598	36.614	14.173	32.087	22.244	5.315	2.795	0.748	14.094	16.929	16.299	81.299
	(320)	(930)	(360)	(815)	(565)	(135)	(71)	(19)	(358)	(430)	(414)	(2065)
BS425 R	17.323	40.551	17.717	37.008	26.772	6.693	2.756	0.866	19.055	22.441	18.661	91.142
	(440)	(1030)	(450)	(940)	(680)	(170)	(70)	(22)	(484)	(570)	(474)	(2315)
BS450 R	17.717	42.913	18.898	38.976	27.165	7.087	3.150	0.866	19.449	22.835	20.709	100.197
	(450)	(1090)	(480)	(990)	(690)	(180)	(80)	(22)	(494)	(580)	(526)	(2545)

Dimensions and Capacities

Model	Q in. (mm)	R in. (mm)	V in. (mm)	Z in. (mm)	Mounting Bolt Size - Quantity	Oil Capacity		Max. Weight	
						oz.	(ml)	lb.	(kg)
B220 R	32.28	3.15	10.04	M12	M20 x 55 (22)	115	(3400)	763.4	(347)
	(820)	(80)	(255)						
BS250 R	39.37	3.94	11.42	M14	M24 x 55 (22)	277	(8200)	1401.4	(637)
	(1000)	(100)	(290)						
BS270 R	43.31	4.33	12.60	M14	M24 x 55 (22)	338	(10000)	1452	(660)
	(1100)	(110)	(320)						
B300 R	51.18	5.31	15.16	M14	M30 x 70 (22)	507	(15000)	2310	(1050)
	(1300)	(135)	(385)						
BS335 R	59.06	5.31	16.34	M16	M36 x 85 (22)	541	(16000)	2662	(1210)
	(1500)	(135)	(415)						
B350 R	62.99	5.31	17.40	M16	M36 x 85 (22)	609	(18000)	3762	(1710)
	(1600)	(135)	(442)						
BS425 R	70.87	6.50	20.87	M20	M36 x 85 (26)	1082	(32000)	3476	(1580)
	(1800)	(165)	(530)						
BS450 R	0.00	0.00	0.00	M20	M42 x 100 (26)	1183	(35000)	6446	(2930)
	(2000)	(165)	(550)						

HOW TO ORDER

BS/BS-HS SERIES SAFETY COVER

This safety cover is specifically designed to fit the BS and BS-HS Series Cam Clutch. The safety cover is intended to protect and cover the rotating portion of the Cam Clutch from debris and foreign objects entering the rotating portion of the unit.

Example How to Order Code: Example Model Number for BS-HS Series Safety Cover

BS	160	HS	SC

Series	Frame Size in mm	Type	Safety Cover
BS: Backstop type	30	**Blank:** Standard BS Series units 35 through 200 Series	SC: Safety cover
	50		
	65		
	75		
	85		
	95		
	110		
	135		
	160	**HS:** High speed units only 160HS and 200HS	
	200		

Note: BS220 and larger safety cover options available on a made-to-order basis. Contact Tsubaki.

Cover Installed



Contents Delivered



BS/BS-HS SAFETY COVER

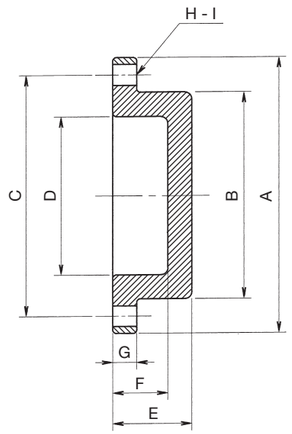

Installation example

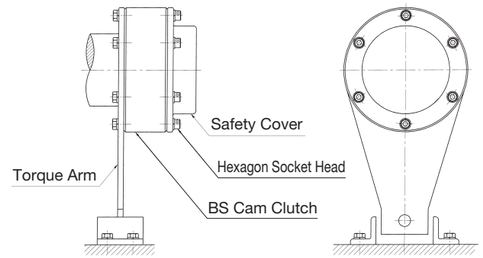

Dimensions and Capacities

Model	A in. (mm)	B in. (mm)	C in. (mm)	D in. (mm)	E in. (mm)	F in. (mm)	G in. (mm)	H - I in. (mm)	M.B.S. - Qty.	Weight lb. (kg)
BS30SC	3.543 (90)	2.362 (60)	3.150 (80)	1.890 (48)	0.945 (24)	0.709 (18)	0.276 (7)	4-6.6	M6 x 16 (4)	1.1 (0.5)
BS50SC	4.921 (125)	3.346 (85)	4.331 (110)	2.874 (73)	1.063 (27)	0.827 (21)	0.276 (7)	4-9.0	M8 x 20 (4)	2.0 (0.9)
BS65SC	6.299 (160)	4.331 (110)	5.512 (140)	3.780 (96)	1.299 (33)	1.024 (26)	0.315 (8)	6-11.0	M10 x 25 (6)	3.7 (1.7)
BS75SC	6.693 (170)	4.724 (120)	5.906 (150)	4.173 (106)	1.299 (33)	1.024 (26)	0.315 (8)	6-11.0	M10 x 25 (6)	4.0 (1.8)
BS85SC	8.268 (210)	5.709 (145)	7.283 (185)	5.157 (131)	1.417 (36)	1.142 (29)	0.315 (8)	6-13.5	M12 x 30 (6)	5.9 (2.7)
BS95SC	9.055 (230)	6.299 (160)	7.874 (200)	5.748 (146)	1.496 (38)	1.220 (31)	0.315 (8)	6-15.5	M14 x 35 (6)	7.3 (3.3)
BS110SC	10.630 (270)	6.890 (175)	8.661 (220)	6.260 (159)	1.969 (50)	1.654 (42)	0.394 (10)	6-17.5	M16 x 40 (6)	12.1 (5.5)
BS135SC	12.598 (320)	9.055 (230)	11.024 (280)	8.425 (214)	1.969 (50)	1.654 (42)	0.394 (10)	8-17.5	M16 x 40 (6)	16.5 (7.5)
BS160SC	14.173 (360)	10.236 (260)	12.402 (315)	9.606 (244)	1.969 (50)	1.654 (42)	0.394 (10)	10-22.0	M20 x 45 (10)	20.2 (9.2)
BS160HSSC	14.173 (360)	10.236 (260)	12.402 (315)	9.606 (244)	1.969 (50)	1.654 (42)	0.394 (10)	10-22.0	M20 x 45 (10)	20.2 (9.2)
BS200SC	16.929 (430)	12.598 (320)	14.961 (380)	11.969 (304)	2.165 (55)	1.850 (47)	0.394 (10)	8-24.0	M22 x 50 (8)	28.6 (13)
BS200HSSC	16.929 (430)	12.598 (320)	14.961 (380)	11.969 (304)	2.165 (55)	1.850 (47)	0.394 (10)	8-24.0	M22 x 50 (8)	28.6 (13)

HOW TO ORDER

BS-HS SERIES TORQUE ARM

Select applications may require the addition of a torque arm depending on how the Cam Clutch is to be mounted or implemented into the system. The following provides direction as to how to order a specific torque arm for a given Cam Clutch size and series.

Example How to Order Code: Example Model Number for BS-HS Series Torque Arm

BS	160	HS	TA
Series	Cam Clutch Frame Size*	High-Speed	Torque Arm
BS: Backstop type	160 200 220 250 270 300 350 425 450	**HS:** High speed/ High strength	**TA:** Torque arm

* Frame size listed is to be used with the applicable BS-HS Series frame size listed on page 79. All BS-HS Series Cam Clutch torque arms are made-to-order (MTO)

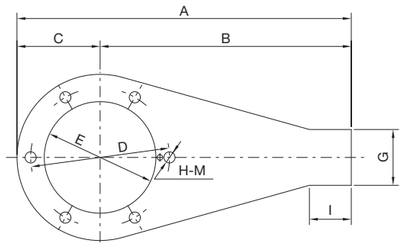



BS160HSTA~BS200HSTA

Single Torque Arm Style

Dimensions and Capacities										
Torque Arm	A in. (mm)	B in. (mm)	C in. (mm)	D in. (mm)	E in. (mm)	G in. (mm)	I in. (mm)	L in. (mm)	H-M Qt. & Dia.	Weight lb. (kg)
BS160HSTA	31.181	24.094	7.087	12.402	10.236	4.724	2.559	1.102	10-22.0	64
	(792)	(612)	(180)	(315)	(260)	(120)	(65)	(28)		(29.3)
BS200HSTA	32.992	24.528	8.465	14.961	12.205	5.118	2.756	1.102	8-24.0	77
	(838)	(623)	(215)	(380)	(310)	(130)	(70)	(28)		(34.8)

TORQUE ARM (OPTION)

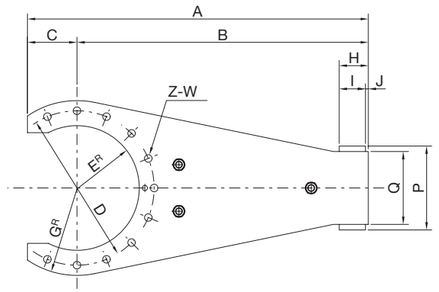

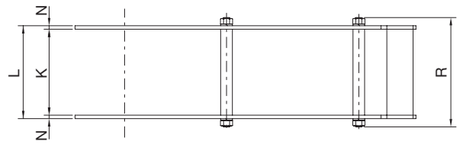

BS220HSTA-BS450HSTA

Dual Torque Arm Style

Dimensions and Capacities																	
Torque Arm	A in. (mm)	B in. (mm)	C in. (mm)	D in. (mm)	E in. (mm)	G in. (mm)	H in. (mm)	I in. (mm)	J in. (mm)	K in. (mm)	L in. (mm)	N in. (mm)	P in. (mm)	Q in. (mm)	R in. (mm)	W-Z Qt. & Dia.	Weight lb. (kg)
BS220HSTA	37.402	32.283	5.118	16.535	6.929	9.252	3.150	2.756	0.394	12.992	14.488	0.748	9.370	7.874	16.535	11-22	176
	(950)	(820)	(130)	(420)	(176)	(235)	(80)	(70)	(10)	(330)	(368)	(19)	(238)	(200)	(420)		(80)
BS250HSTA	46.063	39.370	6.693	20.866	8.425	11.811	3.937	3.543	0.394	14.567	16.063	0.748	11.339	9.843	18.268	11-26	286
	(1170)	(1000)	(170)	(530)	(214)	(300)	(100)	(90)	(10)	(370)	(408)	(19)	(288)	(250)	(464)		(130)
BS270HSTA	50.000	43.307	6.693	22.638	9.252	12.795	4.331	3.937	0.394	15.157	16.654	0.748	11.732	10.236	18.858	11-26	330
	(1270)	(1100)	(170)	(575)	(235)	(325)	(110)	(100)	(10)	(385)	(423)	(19)	(298)	(260)	(479)		(150)
BS300HSTA	58.268	51.181	7.087	27.165	11.220	15.354	5.315	4.724	0.591	16.732	18.937	1.102	14.016	11.811	21.378	11-32	616
	(1480)	(1300)	(180)	(690)	(285)	(390)	(135)	(120)	(15)	(425)	(481)	(28)	(356)	(300)	(543)		(280)
BS350HSTA	72.835	62.992	9.843	32.087	12.913	18.307	5.315	4.724	0.591	17.323	19.528	1.102	16.299	13.780	22.362	11-39	924
	(1850)	(1600)	(250)	(815)	(328)	(465)	(135)	(120)	(15)	(440)	(496)	(28)	(414)	(350)	(568)		(420)
BS425HSTA	83.071	70.866	12.205	37.008	14.961	20.276	6.496	5.906	0.591	22.441	24.961	1.260	18.661	16.142	28.346	11-39	1364
	(2110)	(1800)	(310)	(940)	(380)	(515)	(165)	(150)	(15)	(570)	(634)	(32)	(474)	(410)	(720)		(620)
BS450HSTA	91.339	78.740	12.598	38.976	15.748	21.457	6.496	5.906	0.591	22.441	24.961	1.260	20.709	17.717	28.346	11-45	1628
	(2320)	(2000)	(320)	(990)	(400)	(545)	(165)	(150)	(15)	(570)	(634)	(32)	(526)	(450)	(720)		(740)

End Plate Dimension Table:

Dimensions for end plates are for reference purposes only. Depending on the application, an end plate may or may not be required. Dimensions provided in the end plate dimensional table are intended to provide end users the ability to fabricate an end plate in the event one is needed.

Model	h in. (mm)	t in. (mm)	d in. (mm)	b in. (mm)	Bolt Size
BS160HS	7.874	0.394	0.571	2.362	M12
	(200)	(10)	(14.5)	(60)	
BS200HS	9.449	0.394	0.571	2.362	M12
	(240)	(10)	(14.5)	(60)	
BS220HS	11.024	0.551	0.571	2.362	M12
	(280)	(14)	(14.5)	(60)	
BS250HS	12.205	0.551	0.728	3.937	M16
	(310)	(14)	(18.5)	(100)	
BS270HS	12.992	0.551	0.728	3.937	M16
	(330)	(14)	(18.5)	(100)	
BS300HS	14.173	0.551	0.728	3.937	M16
	(360)	(14)	(18.5)	(100)	
BS335HS	14.961	0.551	0.728	3.937	M16
	(380)	(14)	(18.5)	(100)	
BS425HS	18.110	0.709	0.886	5.906	M20
	(460)	(18)	(23)	(150)	
BS450HS	20.079	0.709	0.886	5.906	M20
	(510)	(18)	(23)	(150)	

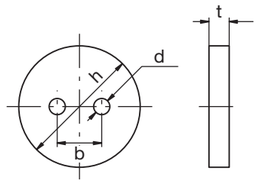

End Plate

HOW TO ORDER

BS SERIES TORQUE ARM

Select applications may require the addition of a torque arm depending on how the Cam Clutch is to be mounted or implemented into the system. The following provides direction as to how to order a specific torque arm for a given Cam Clutch size and series.

Example How to Order Code: Example Model Number for BS Series Torque Arm

BS	30	TA

Series	Frame Size in mm*	Torque Arm
	30	
	50	
	65	
	75	
	85	
	95	
	110	
	135	
	160	
BS: Backstop type	**200**	**TA:** Torque arm
	220	
	250	
	270	
	300	
	335	
	350	
	425	
	450	

* Frame size listed is to be used with the applicable BS Series frame size listed on pages 81-86. Items in bold are commonly stocked sizes. Items that are not in bold are made-to-order (MTO). Contact Tsubaki for BS220 to BS450 Torque Arm dimensions.

TORQUE ARM (OPTION)

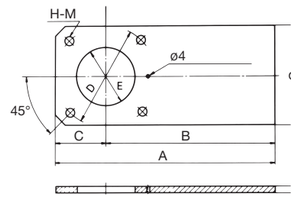

BS30TA • BS50TA

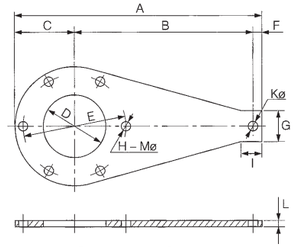

BS65TA~BS200TA

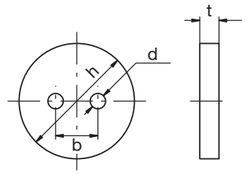

End Plate

Single Torque Arm Style

Dimensions and Capacities												
Torque Arm	A in. (mm)	B in. (mm)	C in. (mm)	D in. (mm)	E in. (mm)	F in. (mm)	G in. (mm)	I in. (mm)	K in. (mm)	L in. (mm)	H-M Qt. & Dia.	Weight lb. (kg)
BS30TA	6.614 (168)	5.118 (130)	1.496 (38)	3.150 (80)	2.165 (55)	-	2.953 (75)	-	-	0.236 (6)	4 - 6.6	1.1 (0.5)
BS50TA	9.055 (230)	7.087 (180)	1.969 (50)	4.331 (110)	3.150 (80)	-	3.937 (100)	-	-	0.236 (6)	4-9	1.8 (0.8)
BS65TA	12.047 (306)	8.268 (210)	3.150 (80)	5.512 (140)	3.543 (90)	0.630 (16)	1.969 (50)	1.181 (30)	0.531 (13.5)	0.236 (6)	6 - 11	2.6 (1.2)
BS75TA	13.937 (354)	9.843 (250)	3.346 (85)	5.906 (150)	3.937 (100)	0.748 (19)	2.559 (65)	1.378 (35)	0.650 (16.5)	0.236 (6)	6 - 11	3.5 (1.6)
BS85TA	17.087 (434)	11.811 (300)	4.134 (105)	7.283 (185)	4.528 (115)	1.142 (29)	3.740 (95)	1.772 (45)	0.807 (20.5)	0.354 (9)	6 - 14	8.4 (3.8)
BS95TA	19.567 (497)	13.780 (350)	4.528 (115)	7.874 (200)	5.118 (130)	1.260 (32)	4.134 (105)	2.165 (55)	0.807 (20.5)	0.354 (9)	6 - 16	10.3 (4.7)
BS110TA	22.047 (560)	15.157 (385)	5.315 (135)	8.661 (220)	5.512 (140)	1.575 (40)	4.331 (110)	2.362 (60)	0.906 (26)	0.472 (12)	6 - 18	18.3 (8.3)
BS135TA	26.220 (666)	18.504 (470)	6.299 (160)	11.024 (280)	7.087 (180)	1.417 (36)	4.724 (120)	2.559 (65)	1.024 (26)	0.472 (12)	6 - 18	24.4 (11.1)
BS160TA	31.181 (792)	22.835 (580)	7.087 (180)	12.402 (315)	10.236 (260)	1.260 (32)	4.724 (120)	2.559 (65)	1.220 (31)	0.748 (19)	10 - 22	44.0 (20)
BS200TA	32.992 (838)	22.835 (580)	8.465 (215)	14.961 (380)	12.205 (310)	1.693 (43)	5.118 (130)	2.756 (70)	1.614 (41)	0.748 (19)	9 - 24	52.4 (23.8)

End Plate Dimension Table:

Dimensions for end plates are for reference purposes only. Depending on the application, an end plate may or may not be required. Dimensions provided in the end plate dimensional table are intended to provide end users the ability to fabricate an end plate in the event one is needed.

Model	h in. (mm)	t in. (mm)	d in. (mm)	b in. (mm)	Bolt Size	Model	h in. (mm)	t in. (mm)	d in. (mm)	b in. (mm)	Bolt Size
BS30	1.772 (45)	0.177 (4.5)	0.236 (6)	0.394 (10)	M5	BS95	4.921 (125)	0.354 (9)	0.453 (11.5)	1.772 (45)	M10
BS50	2.756 (70)	0.177 (4.5)	0.276 (7)	0.787 (20)	M6	BS110	5.512 (140)	0.354 (9)	0.453 (11.5)	1.772 (45)	M10
BS65	3.543 (90)	3.543 (6)	0.236 (9.5)	0.374 (9.5)	M8	BS135	6.890 (175)	0.394 (10)	0.453 (11.5)	1.772 (45)	M10
BS75	3.937 (100)	0.236 (6)	0.374 (9.5)	0.984 (25)	M8	BS160	7.874 (200)	0.394 (10)	0.571 (14.5)	2.362 (60)	M12
BS85	4.528 (115)	0.354 (9)	0.374 (9.5)	0.984 (25)	M8	BS200	9.449 (240)	0.394 (10)	0.571 (14.5)	2.362 (60)	M12

TORQUE ARM (OPTION)

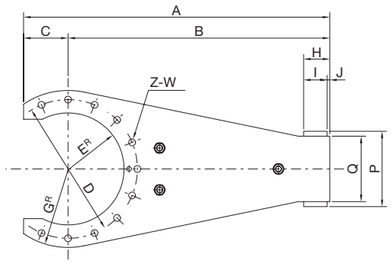

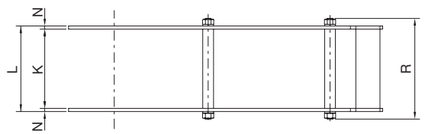

BS220TA~BS450TA

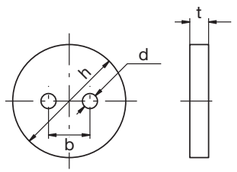

End Plate

Dual Torque Arm Style

Dimensions and Capacities																	
Torque Arm	A in. (mm)	B in. (mm)	C in. (mm)	D in. (mm)	E in. (mm)	G in. (mm)	H in. (mm)	I in. (mm)	J in. (mm)	K in. (mm)	L in. (mm)	N in. (mm)	P in. (mm)	Q in. (mm)	R in. (mm)	W-Z Qt. & Dia.	Weight lb. (kg)
BS220TA	37.402	32.283	5.118	16.535	6.929	9.252	3.150	2.756	0.394	9.252	10.197	0.472	9.370	7.874	12.244	11 - 22.0	129.8
	(950)	(820)	(130)	(420)	(176)	(235)	(80)	(70)	(10)	(235)	(259)	(12)	(238)	(200)	(311)		(59)
BS250TA	46.063	39.370	6.693	20.866	8.425	11.811	3.937	3.543	0.394	11.614	12.559	0.472	11.339	9.843	14.764	11-26.0	211.2
	(1170)	(1000)	(170)	(530)	(214)	(300)	(100)	(90)	(10)	(295)	(319)	(12)	(288)	(250)	(375)		(96)
BS270TA	50.000	43.307	6.693	22.638	9.252	12.795	4.331	3.937	0.394	11.614	12.559	0.472	11.732	10.236	14.764	11-26.0	242.0
	(1270)	(1100)	(170)	(575)	(235)	(325)	(110)	(100)	(10)	(295)	(319)	(12)	(298)	(260)	(375)		(110)
BS300TA	58.268	51.181	7.087	27.165	11.220	15.354	5.315	4.724	0.591	11.614	13.110	0.748	14.016	11.811	15.591	11 - 32.0	528.0
	(1480)	(1300)	(180)	(690)	(285)	(390)	(135)	(120)	(15)	(295)	(333)	(19)	(356)	(300)	(396)		(240)
BS335TA	68.110	59.055	9.055	29.528	12.087	16.732	5.315	4.724	0.591	12.008	13.504	0.748	15.197	12.992	15.945	11 - 39.0	594.0
	(1730)	(1500)	(230)	(750)	(307)	(425)	(135)	(120)	(15)	(305)	(343)	(19)	(386)	(330)	(405)		(270)
BS350TA	72.835	62.992	9.843	32.087	12.913	18.307	5.315	4.724	0.591	12.598	14.094	0.748	16.299	13.780	16.929	11 - 39.0	726.0
	(1850)	(1600)	(250)	(815)	(328)	(465)	(135)	(120)	(15)	(320)	(358)	(19)	(414)	(350)	(430)		(330)
BS425TA	83.071	70.866	12.205	37.008	14.961	20.276	6.496	5.906	0.591	17.323	19.055	0.866	18.661	16.142	22.441	13 - 39.0	1056.0
	(2110)	(1800)	(310)	(940)	(380)	(515)	(165)	(150)	(15)	(440)	(484)	(22)	(474)	(410)	(570)		(480)
BS450TA	91.339	78.740	12.598	38.976	15.748	21.457	6.496	5.906	0.591	17.717	19.449	0.866	20.709	17.717	22.835	13 - 45.0	1232.0
	(2320)	(2000)	(320)	(990)	(400)	(545)	(165)	(150)	(15)	(450)	(494)	(22)	(526)	(450)	(580)		(560)

End Plate Dimension Table:

Dimensions for end plates are for reference purposes only. Depending on the application, an end plate may or may not be required. Dimensions provided in the end plate dimensional table are intended to provide end users the ability to fabricate an end plate in the event one is needed.

Model	h in. (mm)	t in. (mm)	d in. (mm)	b in. (mm)	Bolt Size	Model	h in. (mm)	t in. (mm)	d in. (mm)	b in. (mm)	Bolt Size
BS220	11.024	0.551	0.571	2.362	M12	BS335	14.961	0.551	0.728	3.937	M16
	(280)	(14)	(14.5)	(60)			(380)	(14)	(18.5)	(100)	
BS250	12.205	0.551	0.728	3.937	M16	BS350	16.142	0.551	0.728	3.937	M16
	(310)	(14)	(18.5)	(100)			(410)	(14)	(18.5)	(100)	
BS270	12.992	0.551	0.728	3.937	M16	BS425	18.110	0.709	0.886	5.906	M5
	(330)	(14)	(18.5)	(100)			(460)	(18)	(22.5)	(150)	
BS300	14.173	0.551	0.728	3.937	M16	BS450	20.079	0.709	0.886	5.906	M5
	(360)	(14)	(18.5)	(100)			(510)	(18)	(22.5)	(150)	

NOTES

HOW TO ORDER

BSEU SERIES CAM CLUTCH

BSEU Series Cam Clutch was developed as a user-friendly backstopping Cam Clutch. It has cam and roller construction which is the same as the smaller size BS Series Cam Clutch. The outer race has a special shape which combines the torque arm providing easy installation. These Cam Clutches are shipped pre-lubricated with grease and ready for installation. Most often used as a backstop in applications where limited space is available.

Example How to Order Code: BSEU Series Cam Clutch

BSEU	90	-	80

Series	Size		Bore
BSEU: Backstop type with integral torque arm	25	-	20
			25
	40	-	20
			25
			30
			35
			40
	70	-	45
			50
			55
			60
			65
			70
	90	-	75
			80
			85
			90

Specifications		
Torque Capacity		Overrunning Speed
lb.ft.	(Nm)	Max. r/min
159	(216)	500
159	(216)	500
1062	(1440)	450
1062	(1440)	450
1062	(1440)	450
1062	(1440)	450
2316	(3140)	350
2316	(3140)	350
2316	(3140)	350
2316	(3140)	350
2316	(3140)	350
2316	(3140)	350
3467	(4700)	250
3467	(4700)	250
3467	(4700)	250
3467	(4700)	250

Typical Installation 1

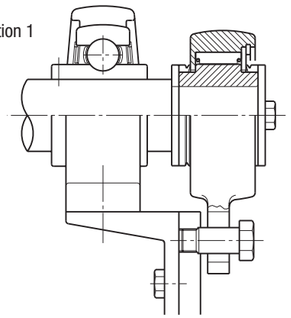

Typical Installation 2

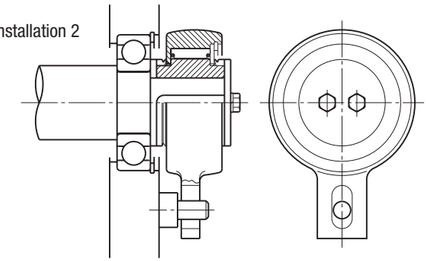

BSEU SERIES CAM CLUTCH



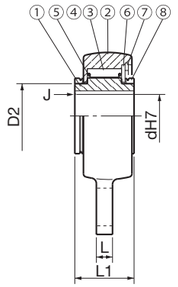

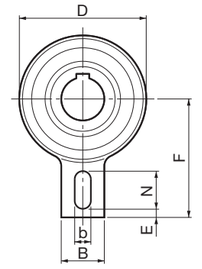

1 Inner race
2 Outer race
3 Cam
4 Roller
5 Spring
6 Plate
7 Snap ring
8 V-ring

Shaft tolerances are found on page 41.

Dimensions and Capacities

Model	Bore Size in. (mm)	Inner Race Keyway (mm)	D in. (mm)	D2 in. (mm)	L1 in. (mm)	L in. (mm)	B in. (mm)	F in. (mm)	b in. (mm)	N in. (mm)	E in. (mm)	J in. (mm)	Weight Max, lb. (kg)
BSEU25-20	0.787	6 x 2.8	3.268	1.654	1.378	0.472	1.575	3.543	0.591	1.378	0.197	0.039	2.2
	(20)		(83)	(42)	(35)	(12)	(40)	(90)	(15)	(35)	(5)	(1)	(1)
BSEU25-25	0.984	8 x 3.3	3.268	1.654	1.378	0.472	1.575	3.543	0.591	1.378	0.197	0.039	2.2
	(25)		(83)	(42)	(35)	(12)	(40)	(90)	(15)	(35)	(5)	(1)	(1)
BSEU40-20	0.787	6 x 2.8	4.646	2.362	2.165	0.591	1.575	4.331	0.591	1.378	0.315	0.059	8.4
	(20)		(118)	(60)	(55)	(15)	(40)	(110)	(15)	(35)	(8)	(1.5)	(3.8)
BSEU40-25	0.984	8 x 3.3	4.646	2.362	2.165	0.591	1.575	4.331	0.591	1.378	0.315	0.059	8.4
	(25)		(118)	(60)	(55)	(15)	(40)	(110)	(15)	(35)	(8)	(1.5)	(3.8)
BSEU40-30	1.181	8 x 3.3	4.646	2.362	2.165	0.591	1.575	4.331	0.591	1.378	0.315	0.059	8.4
	(30)		(118)	(60)	(55)	(15)	(40)	(110)	(15)	(35)	(8)	(1.5)	(3.8)
BSEU40-35	1.378	10 x 3.3	4.646	2.362	2.165	0.591	1.575	4.331	0.591	1.378	0.315	0.059	8.4
	(35)		(118)	(60)	(55)	(15)	(40)	(110)	(15)	(35)	(8)	(1.5)	(3.8)
BSEU40-40	1.575	12 x 3.3	4.646	2.362	2.165	0.591	1.575	4.331	0.591	1.378	0.315	0.059	8.4
	(40)		(118)	(60)	(55)	(15)	(40)	(110)	(15)	(35)	(8)	(1.5)	(3.8)
BSEU70-45	1.772	14 x 3.8	6.496	3.543	2.323	0.787	3.150	5.512	0.709	1.378	0.394	0.059	16.7
	(45)		(165)	(90)	(59)	(20)	(80)	(140)	(18)	(35)	(10)	(1.5)	(7.6)
BSEU70-50	1.969	14 x 3.8	6.496	3.543	2.323	0.787	3.150	5.512	0.709	1.378	0.394	0.059	16.7
	(50)		(165)	(90)	(59)	(20)	(80)	(140)	(18)	(35)	(10)	(1.5)	(7.6)
BSEU70-55	2.165	16 x 4.3	6.496	3.543	2.323	0.787	3.150	5.512	0.709	1.378	0.394	0.079	16.7
	(55)		(165)	(90)	(59)	(20)	(80)	(140)	(18)	(35)	(10)	(2)	(7.6)
BSEU70-60	2.362	18 x 4.4	6.496	3.543	2.323	0.787	3.150	5.512	0.709	1.378	0.394	0.079	16.7
	(60)		(165)	(90)	(59)	(20)	(80)	(140)	(18)	(35)	(10)	(2)	(7.6)
BSEU70-65	2.559	18 x 4.4	6.496	3.543	2.323	0.787	3.150	5.512	0.709	1.378	0.394	0.079	16.7
	(65)		(165)	(90)	(59)	(20)	(80)	(140)	(18)	(35)	(10)	(2)	(7.6)
BSEU70-70	2.756	20 x 4.9	6.496	3.543	2.323	0.787	3.150	5.512	0.709	1.378	0.394	0.079	16.7
	(70)		(165)	(90)	(59)	(20)	(80)	(140)	(18)	(35)	(10)	(2)	(7.6)
BSEU90-75	2.953	20 x 4.9	7.480	4.724	2.480	0.787	3.150	6.496	0.787	1.575	0.591	0.079	22.0
	(75)		(190)	(120)	(63)	(20)	(80)	(165)	(20)	(40)	(15)	(2)	(10)
BSEU90-80	3.150	22 x 5.4	7.480	4.724	2.480	0.787	3.150	6.496	0.787	1.575	0.591	0.079	22.0
	(80)		(190)	(120)	(63)	(20)	(80)	(165)	(20)	(40)	(15)	(2)	(10)
BSEU90-85	3.346	22 x 5.4	7.480	4.724	2.480	0.787	3.150	6.496	0.787	1.575	0.591	0.079	22.0
	(85)		(190)	(120)	(63)	(20)	(80)	(165)	(20)	(40)	(15)	(2)	(10)
BSEU90-90	3.543	25 x 5.4	7.480	4.724	2.480	0.787	3.150	6.496	0.787	1.575	0.591	0.079	22.0
	(90)		(190)	(120)	(63)	(20)	(80)	(165)	(20)	(40)	(15)	(2)	(10)

HOW TO ORDER

BR-HT SERIES CAM CLUTCH

BR-HT is mainly used in backstop applications as an integral part of a gear reducer. Prevention of reverse rotation for inclined conveyor and bucket elevator are typical application examples. BR-HT assures not only the immediate backstop function under high torque, but also long service life by the “lift-off” design. In addition, installation on the high speed shaft with low torque enables selection of more compact models with resulting lower cost.

Example How To Order Code: BR-HT Series Cam Clutch

BR	40	HT	-	R66B	-	35
Series	**Size**	**Descriptor**	**-**	**Cross**	**-**	**Bore**
BR: High speed overrunning backstop clutch	**40:** Size of the Cam Clutch BR-HT Series has sizes available from 15 thru 300	**HT:** Descriptor for high torque capacity	-	**R66B:** Provides interchange information plus description of the cam cage width The "B" is an internal Tsubaki designator for the width of the cam	-	**35:** 35 mm bore diameter For each size within a given BR Series Cam Clutch, multiple bore diameters are available

Service Life of BR-HT Series

The service life of previous TSUBAKI Cam Clutch models was determined as the frictional service life during free-running (when the clutch was disengaged) and the fatigue service life of the engaged clutch. However, with BR-HT Series, frictional service life is not a factor because there is no mechanical contact when the clutch is disengaged. As a result, service life is determined solely by the fatigue life of the engaged clutch.

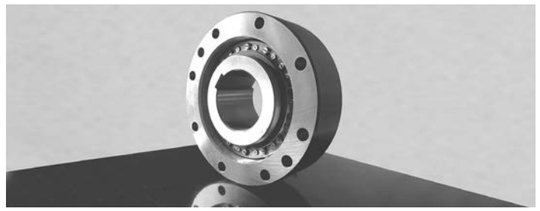

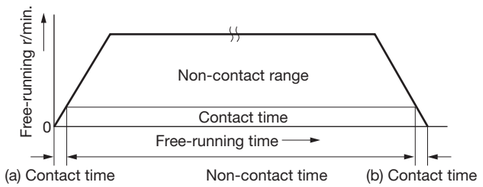

Friction in the clutch mechanism only occurs during a very short period of time denoted by “a” and “b”. “a” is the time during which the cam is engaged until the acceleration of inner race causes it to disengage. “b” is the time during which the cam engages when the inner race decelerates.

BR-HT SERIES CAM CLUTCH

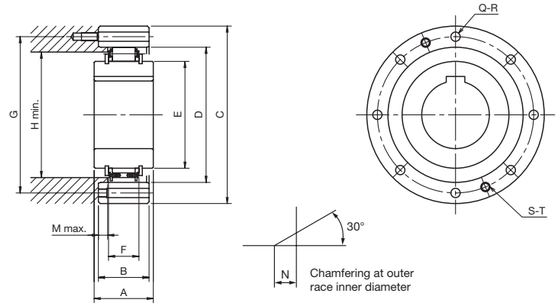

Shaft tolerances are found on page 41.

Dimensions and Capacities

Model	Bore Size mm	T.C. lb.ft (Nm)	Inner Race Overrunning Speed (r/min) Min.	Inner Race Overrunning Speed (r/min) Max.	Max. Engagement (r/min)	A in. (mm)	B in. (mm)	C in. (mm)	D in. (mm)	E in. (mm)	Mounting Holes PCD G	Mounting Holes Qty-Size Q-R	Removal Holes Qty-Size S-T	F in. (mm)	Weight lbs. (kg)	H min. in. (mm)	M max. in. (mm)	N Chamfer in. (mm)
BR15HT-R31A	*20	77 (105)	880	3600	550	0.945 (24)	0.984 (25)	3.346 (85)	2.165 (55)	1.181 (30)	2.756 (70)	6-M6	2-M6	0.669 (17)	1.8 (0.8)	1.772 (45)	0.118 (3)	0.039 (1)
BR18HT-R38A	*25	114 (155)	850	3600	500	0.945 (24)	0.984 (25)	3.543 (90)	2.441 (62)	1.457 (37)	2.953 (75)	6-M6	2-M6	0.669 (17)	2.0 (0.9)	1.969 (50)	0.118 (3)	0.039 (1)
BR20HT-S20B	20	166 (225)	850	3600	400	1.378 (35)	1.378 (35)	3.543 (90)	2.598 (66)	1.614 (41)	3.071 (78)	6-M6	2-M6	0.984 (25)	2.9 (1.3)	2.087 (53)	0.157 (4)	0.039 (1)
BR25HT-B46B	25 30	295 (400)	800	3600	380	1.378 (35)	1.378 (35)	3.740 (95)	2.756 (70)	1.772 (45)	3.228 (82)	6-M6	2-M6	0.984 (25)	3.1 (1.4)	2.283 (58)	0.157 (4)	0.039 (1)
BR30HT-S30B	30	369 (500)	740	3600	360	1.378 (35)	1.378 (35)	3.937 (100)	2.953 (75)	1.969 (50)	3.425 (87)	6-M6	2-M6	0.984 (25)	3.3 (1.5)	2.520 (64)	0.157 (4)	0.039 (1)
BR30HT-R51B	25 30 35 36	369 (500)	740	3600	360	1.378 (35)	1.378 (35)	4.134 (105)	2.953 (75)	1.969 (50)	3.543 (90)	6-M6	2-M6	0.984 (25)	4.0 (1.8)	2.520 (64)	0.157 (4)	0.039 (1)
BR35HT-B56B	35 40	443 (600)	710	3600	340	1.378 (35)	1.378 (35)	4.331 (110)	3.150 (80)	2.165 (55)	3.780 (96)	8-M6	2-M6	0.984 (25)	4.2 (1.9)	2.756 (70)	0.157 (4)	0.039 (1)
BR38HT-R61A	30 35 40 *45	313 (425)	740	3600	400	0.984 (25)	0.984 (25)	4.724 (120)	3.346 (85)	2.362 (60)	4.134 (105)	6-M8	2-M8	0.748 (19)	4.0 (1.8)	2.913 (74)	0.118 (3)	0.039 (1)
BR40HT-S40B	40	627 (850)	670	3600	320	1.378 (35)	1.378 (35)	4.921 (125)	3.543 (90)	2.559 (65)	4.252 (108)	8-M8	2-M8	0.984 (25)	5.3 (2.4)	3.228 (82)	0.157 (4)	0.039 (1)
BR40HT-R66B	35 40 45 *48	627 (850)	670	3600	320	1.378 (35)	1.378 (35)	5.197 (132)	3.543 (90)	2.559 (65)	4.528 (115)	8-M8	2-M8	0.984 (25)	6.4 (2.9)	3.228 (82)	0.157 (4)	0.039 (1)
BR45HT-S45B	45	701 (950)	640	3600	310	1.378 (35)	1.378 (35)	5.118 (130)	3.740 (95)	2.756 (70)	4.409 (112)	8-M8	2-M8	0.984 (25)	5.7 (2.6)	3.386 (86)	0.157 (4)	0.039 (1)
BR48HT-R76B	45 55 *60	811 (1100)	620	3600	300	1.378 (35)	1.378 (35)	5.512 (140)	3.937 (100)	2.953 (75)	4.921 (125)	8-M8	2-M8	0.984 (25)	7.3 (3.3)	3.622 (92)	0.157 (4)	0.039 (1)
BR50HT-B86B	40 45 50 60 65 *70	1069 (1450)	590	3600	280	1.575 (40)	1.575 (40)	5.906 (150)	4.331 (110)	3.346 (85)	5.197 (132)	8-M8	2-M8	0.984 (25)	9.5 (4.3)	4.055 (103)	0.256 (6.5)	0.039 (1)
BR58HT-R101B	55 70 *80	1328 (1800)	550	3600	260	1.969 (50)	1.969 (50)	6.890 (175)	4.921 (125)	3.937 (100)	6.102 (155)	8-M10	2-M10	0.984 (25)	14.7 (6.7)	4.606 (117)	0.453 (11.5)	0.039 (1)
BR60HT-B85A	45 50 60 65	1770 (2400)	420	3600	230	2.362 (60)	1.969 (50)	6.890 (175)	4.921 (125)	3.622 (92)	6.102 (155)	8-M10	2-M10	1.417 (36)	16.7 (7.6)	4.331 (110)	0.236 (6)	0.039 (1)
BR70HT-B100A	45 50 55 60 70 75 *80	2323 (3150)	390	3600	220	2.362 (60)	1.969 (50)	7.480 (190)	5.512 (140)	4.213 (107)	6.496 (165)	12-M10	2-M10	1.417 (36)	20.2 (9.2)	4.921 (125)	0.236 (6)	0.059 (1.5)
BR80HT-S80A	80	3688 (5000)	440	3600	200	2.756 (70)	2.362 (60)	8.268 (210)	6.299 (160)	5.000 (127)	7.283 (185)	12-M10	2-M10	1.417 (36)	26.4 (12)	5.827 (148)	0.433 (11)	0.059 (1.5)
BR80HT-B120B	60 65 70 75 80 95	5163 (7000)	310	3600	160	2.756 (70)	2.362 (60)	8.268 (210)	6.299 (160)	5.000 (127)	7.283 (185)	12-M10	2-M10	1.969 (50)	28.6 (13)	5.827 (148)	0.157 (4)	0.059 (1.5)
BR90HT-S90A	90	4425 (6000)	410	3000	190	3.150 (80)	2.756 (70)	9.055 (230)	7.087 (180)	5.787 (147)	8.110 (206)	12-M12	2-M12	1.417 (36)	35.2 (16)	6.693 (170)	0.630 (16)	0.079 (2)
BR90HT-B140B	65 90 100 110	6638 (9000)	300	3000	150	2.756 (70)	2.756 (70)	9.646 (245)	7.087 (180)	5.787 (147)	8.583 (218)	12-M12	2-M12	1.969 (50)	44.0 (20)	6.693 (170)	0.354 (9)	0.079 (2)
BR95HT-S100C	100	15120 (20500)	240	2700	130	3.543 (90)	3.150 (80)	11.417 (290)	8.268 (210)	6.969 (177)	10.157 (258)	12-M16	2-M16	2.480 (63)	72.6 (33)	7.874 (200)	0.295 (7.5)	0.079 (2)
BR95HT-R170C	70 85 90 100 120 130	15120 (20500)	240	2700	130	3.150 (80)	3.150 (80)	11.417 (290)	8.268 (210)	6.969 (177)	10.157 (258)	12-M16	2-M16	2.480 (63)	77.0 (35)	7.874 (200)	0.295 (7.5)	0.079 (2)

Notes: 1. T.C.=Torque Capacity. The maximum transmissible torque is twice the T.C.
2. Keyway size is not listed in the table. Keyway size is per ISOR773 DIN6885.1 unless the bore is preceded by an asterisk (*). If bore is preceded by an asterisk, keyway is per DIN6885.3.
3. Minimum overrunning speed of inner race should not be below listed value during continuous operation.
4. Max. engagement speed must not be exceeded when transmitting torque.

BR-HT SERIES CAM CLUTCH

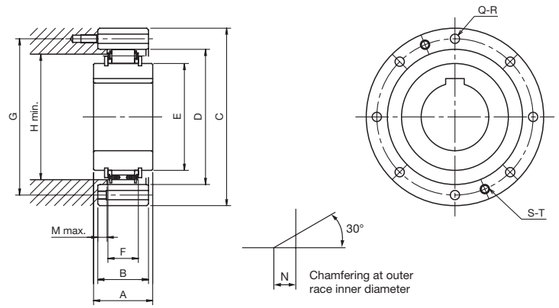

Shaft tolerances are found on page 41.

Dimensions and Capacities

Model	Bore Size mm	T.C. lb.ft (Nm)	Inner Race Overrunning Speed (r/min) Min.	Inner Race Overrunning Speed (r/min) Max.	Max. Engagement (r/min)	A in. (mm)	B in. (mm)	C in. (mm)	D in. (mm)	E in. (mm)	Mounting Holes PCD G	Mounting Holes Qty-Size Q-R	Removal Holes Qty-Size S-T	F in. (mm)	Weight lbs. (kg)	H min. in. (mm)	M max. in. (mm)	N Chamfer in. (mm)
BR98HT-R200C	130 155	19914 (27000)	230	2100	110	3.150 (80)	3.150 (80)	12.205 (310)	9.449 (240)	8.150 (207)	10.945 (278)	12-M16	2-M16	2.480 (63)	72.6 (33)	9.055 (230)	0.295 (7.5)	0.079 (2)
BR100HT-S100A	100	8113 (11000)	440	2700	210	3.543 (90)	3.150 (80)	11.417 (290)	8.268 (210)	5.630 (143)	10.157 (258)	12-M16	2-M16	2.071 (52.6)	61.6 (28)	7.874 (200)	0.453 (11.5)	0.079 (2)
BR130HT-S130A	130	11801 (16000)	400	2400	190	3.150 (80)	3.150 (80)	12.677 (322)	9.449 (240)	6.811 (173)	10.945 (278)	12-M16	2-M16	2.071 (52.6)	72.6 (33)	8.268 (210)	0.453 (11.5)	0.079 (2)
BR180HT-S180A	180	23602 (32000)	300	1300	160	3.543 (90)	3.150 (80)	16.220 (412)	12.205 (310)	9.567 (243)	14.173 (360)	12-M20	2-M20	2.087 (53)	123.2 (56)	11.024 (280)	0.453 (11.5)	0.079 (2)
BR180HT-S180C	180	39091 (53000)	250	1300	120	4.724 (120)	4.724 (120)	16.614 (422)	12.205 (310)	9.567 (243)	14.567 (370)	16-M20	2-M20	3.268 (83)	187.0 (85)	11.024 (280)	0.650 (16.5)	0.079 (2)
BR180HT-S180WA	180	47204 (64000)	300	1300	160	6.299 (160)	6.299 (160)	16.220 (412)	12.205 (310)	9.567 (243)	14.173 (360)	12-M20	2-M20	4.173 (106)	235.4 (107)	11.024 (280)	1.181 (30)	0.079 (2)
BR180HT-S180WC	180	78181 (106000)	250	1300	120	9.449 (240)	9.449 (240)	16.732 (425)	12.205 (310)	9.567 (243)	14.567 (370)	16-M20	2-M20	6.535 (166)	382.8 (174)	11.024 (280)	1.378 (35)	0.079 (2)
BR180HT-R240A	185	23602 (32000)	220	1300	110	3.543 (90)	3.150 (80)	15.748 (400)	12.205 (310)	9.567 (243)	14.173 (360)	12-M20	2-M20	2.087 (53)	110.0 (50)	11.024 (280)	0.453 (11.5)	0.079 (2)
BR180HT-R240D	185	47204 (64000)	210	1300	100	4.724 (120)	4.921 (125)	16.535 (420)	12.205 (310)	9.567 (243)	14.567 (370)	16-M24	2-M24	3.780 (96)	184.8 (84)	11.024 (280)	0.492 (12.5)	0.079 (2)
BR180HT-R240WB	185	51629 (70000)	220	1300	110	6.299 (160)	6.299 (160)	16.220 (412)	12.205 (310)	9.567 (243)	14.173 (360)	24-M20	2-M20	5.512 (140)	220.0 (100)	11.024 (280)	0.315 (8)	0.079 (2)
BR180HT-R240WD	185	94408 (128000)	210	1300	100	9.449 (240)	9.449 (240)	16.732 (425)	12.205 (310)	9.567 (243)	14.567 (370)	24-M24	2-M24	7.559 (192)	358.6 (163)	11.024 (280)	0.866 (22)	0.079 (2)
BR190HT-R260A	205	28765 (39000)	200	1300	95	4.134 (105)	3.150 (80)	16.929 (430)	12.992 (330)	10.354 (263)	14.961 (380)	16-M20	2-M20	2.087 (53)	132.0 (60)	11.811 (300)	0.453 (11.5)	0.079 (2)
BR220HT-S220A	220	33190 (45000)	280	1100	140	4.134 (105)	3.150 (80)	18.504 (470)	14.173 (360)	11.535 (293)	16.142 (410)	16-M20	2-M20	2.087 (53)	162.8 (74)	12.992 (330)	0.453 (11.5)	0.079 (2)
BR220HT-S220C	220	51629 (70000)	230	1100	110	4.724 (120)	4.724 (120)	18.504 (470)	14.173 (360)	11.535 (293)	16.142 (410)	24-M20	2-M20	3.268 (83)	220.0 (100)	12.992 (330)	0.650 (16.5)	0.079 (2)
BR220HT-S220WA	220	66380 (90000)	280	1100	140	6.299 (160)	6.299 (160)	18.898 (480)	14.173 (360)	11.535 (293)	16.142 (410)	18-M24	2-M24	4.173 (106)	310.2 (141)	12.992 (330)	0.984 (25)	0.079 (2)
BR220HT-S220WC	220	103258 (140000)	230	1100	110	9.449 (240)	9.449 (240)	19.291 (490)	14.173 (360)	11.535 (293)	16.142 (410)	20-M30	2-M30	6.535 (166)	473.0 (215)	12.992 (330)	1.378 (35)	0.079 (2)
BR220HT-R290B	230	44254 (60000)	195	1100	115	4.134 (105)	3.150 (80)	18.110 (460)	14.173 (360)	11.535 (293)	16.142 (410)	16-M20	2-M20	2.756 (70)	191.4 (87)	12.992 (330)	0.118 (3)	0.079 (2)
BR220HT-R290D	230	67856 (92000)	190	1100	95	4.724 (120)	4.331 (110)	18.110 (460)	14.173 (360)	11.535 (293)	16.142 (410)	16-M20	2-M20	3.780 (96)	321.2 (146)	12.992 (330)	0.197 (5)	0.079 (2)
BR220HT-R290WB	230	88507 (120000)	195	1100	115	6.299 (160)	6.299 (160)	18.898 (480)	14.173 (360)	11.535 (293)	16.142 (410)	18-M24	2-M24	5.512 (140)	264.0 (120)	12.992 (330)	0.315 (8)	0.079 (2)
BR220HT-R290WD	230	135711 (184000)	190	1100	95	9.449 (240)	9.449 (240)	19.291 (490)	14.173 (360)	11.535 (293)	16.732 (425)	20-M30	2-M30	7.559 (192)	453.2 (206)	12.992 (330)	0.866 (22)	0.079 (2)
BR230HT-R310B	240	51629 (70000)	190	1100	90	4.331 (110)	4.921 (125)	19.567 (497)	14.961 (380)	12.323 (313)	17.717 (450)	24-M20	2-M20	2.756 (70)	242.0 (110)	13.780 (350)	1.004 (25.5)	0.118 (3)

Notes: 1. T.C.=Torque Capacity. The maximum transmissible torque is twice the T.C.
2. Keyway size is not listed in the table. Keyway size is per ISOR773 DIN6885.1 unless the bore is preceded by an asterisk (*)
If bore is preceded by an asterisk, keyway is per DIN6885.3
3. Minimum overrunning speed of inner race should not be below listed value during continuous operation.
4. Max. engagement speed must not be exceeded when transmitting torque.

BR-HT SERIES CAM CLUTCH

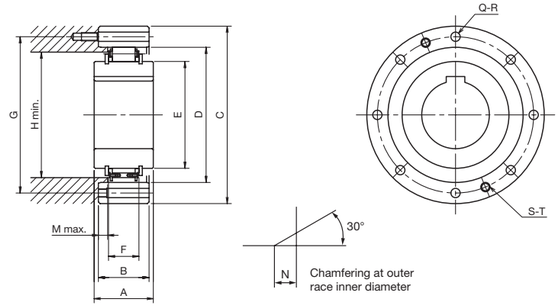

Shaft tolerances are found on page 41.

Dimensions and Capacities

Model	Bore Size mm	T.C. lb.ft (Nm)	Inner Race Overrunning Speed (r/min) Min.	Inner Race Overrunning Speed (r/min) Max.	Max. Engagement (r/min)	A in. (mm)	B in. (mm)	C in. (mm)	D in. (mm)	E in. (mm)	Mounting Holes PCD G	Mounting Holes Qty-Size Q-R	Removal Holes Qty-Size S-T	F in. (mm)	Weight lbs. (kg)	H min. in. (mm)	M max. in. (mm)	N Chamfer in. (mm)
BR230HT-R310D	240	81132 (110000)	185	1100	80	4.724 (120)	4.921 (125)	19.567 (497)	14.961 (380)	12.323 (313)	17.717 (450)	24-M20	2-M20	3.780 (96)	255.2 (116)	13.780 (350)	0.492 (12.5)	0.118 (3)
BR240HT-S240A	240	39828 (54000)	220	1100	120	4.134 (105)	3.543 (90)	19.685 (500)	15.354 (390)	12.717 (323)	17.323 (440)	16-M20	2-M20	2.087 (53)	200.2 (91)	14.173 (360)	0.650 (16.5)	0.118 (3)
BR240HT-S240C	240	64905 (88000)	185	1100	110	4.724 (120)	4.724 (120)	20.472 (520)	15.354 (390)	12.717 (323)	17.323 (440)	16-M24	2-M24	3.268 (83)	283.8 (129)	14.173 (360)	0.650 (16.5)	0.118 (3)
BR240HT-S240WA	240	79656 (108000)	220	1100	120	7.087 (180)	7.087 (180)	19.882 (505)	15.354 (390)	12.717 (323)	17.323 (440)	24-M24	2-M24	4.173 (106)	354.2 (161)	14.173 (360)	1.378 (35)	0.118 (3)
BR240HT-S240WC	240	129811 (176000)	185	1100	110	9.449 (240)	9.449 (240)	20.866 (530)	15.354 (390)	12.717 (323)	17.323 (440)	24-M30	2-M30	6.535 (166)	547.8 (249)	14.173 (360)	1.378 (35)	0.118 (3)
BR240HT-R320B	250	56792 (77000)	190	1100	115	4.134 (105)	3.150 (80)	19.291 (490)	15.354 (390)	12.717 (323)	17.323 (440)	16-M24	2-M24	2.756 (70)	171.6 (78)	14.173 (360)	0.118 (3)	0.118 (3)
BR240HT-R320D	250	83344 (113000)	180	1100	105	4.724 (120)	4.724 (120)	20.472 (520)	15.354 (390)	12.717 (323)	17.323 (440)	16-M24	2-M24	3.780 (96)	281.6 (128)	14.173 (360)	0.394 (10)	0.118 (3)
BR240HT-R320WB	250	113584 (154000)	190	1100	115	7.087 (180)	7.087 (180)	19.882 (505)	15.354 (390)	12.717 (323)	17.323 (440)	24-M24	2-M24	5.512 (140)	380.6 (173)	14.173 (360)	0.709 (18)	0.118 (3)
BR240HT-R320WD	250	166689 (226000)	180	1100	105	9.449 (240)	9.449 (240)	20.866 (530)	15.354 (390)	12.717 (323)	18.110 (460)	24-M30	2-M30	7.559 (192)	569.8 (259)	14.173 (360)	0.866 (22)	0.118 (3)
BR260HT-S260A	260	48679 (66000)	250	1000	130	4.134 (105)	4.134 (105)	21.654 (550)	16.929 (430)	14.291 (363)	19.685 (500)	16-M24	2-M24	2.244 (57)	268.4 (122)	15.748 (400)	0.866 (22)	0.118 (3)
BR260HT-S260C	260	81132 (110000)	190	1000	100	4.921 (125)	4.921 (125)	22.835 (580)	16.929 (430)	14.291 (363)	19.685 (500)	24-M24	2-M24	3.425 (87)	374.0 (170)	15.748 (400)	0.669 (17)	0.118 (3)
BR260HT-S260WA	260	97358 (132000)	250	1000	130	8.268 (210)	8.268 (210)	21.654 (550)	16.929 (430)	14.291 (363)	19.685 (500)	24-M24	2-M24	4.488 (114)	517.0 (235)	15.748 (400)	1.811 (46)	0.118 (3)
BR260HT-S260WC	260	162263 (220000)	190	1000	100	9.843 (250)	9.843 (250)	22.835 (580)	16.929 (430)	14.291 (363)	19.685 (500)	24-M30	2-M30	6.850 (174)	710.6 (323)	15.748 (400)	1.417 (36)	0.118 (3)
BR260HT-R360D	280	110634 (150000)	170	1000	90	4.921 (125)	4.724 (120)	21.260 (540)	16.929 (430)	14.291 (363)	19.685 (500)	24-M24	2-M24	3.937 (100)	279.4 (127)	15.748 (400)	0.315 (8)	0.118 (3)
BR260HT-R360WB	280	144562 (196000)	175	1000	95	8.268 (210)	8.268 (210)	21.654 (550)	16.929 (430)	14.291 (363)	19.685 (500)	24-M24	2-M24	5.827 (148)	499.4 (227)	15.748 (400)	1.142 (29)	0.118 (3)
BR260HT-R360WD	280	221268 (300000)	170	1000	90	9.843 (250)	9.843 (250)	22.835 (580)	16.929 (430)	14.291 (363)	19.685 (500)	24-M30	2-M30	7.874 (200)	684.2 (311)	15.748 (400)	0.906 (23)	0.118 (3)
BR300HT-S300A	300	60480 (82000)	230	1000	120	4.134 (105)	4.134 (105)	24.803 (630)	18.898 (480)	16.260 (413)	22.047 (560)	24-M24	2-M24	2.087 (53)	358.6 (163)	18.110 (460)	0.866 (22)	0.118 (3)
BR300HT-S300C	300	103258 (140000)	200	1000	95	4.921 (125)	4.921 (125)	24.803 (630)	18.898 (480)	16.260 (413)	22.047 (560)	24-M24	2-M24	3.268 (83)	435.6 (198)	18.110 (460)	0.669 (17)	0.118 (3)
BR300HT-S300WA	300	120960 (164000)	230	1000	120	8.268 (210)	8.268 (210)	24.803 (630)	18.898 (480)	16.260 (413)	22.047 (560)	24-M24	2-M24	4.173 (106)	712.8 (324)	18.110 (460)	1.811 (46)	0.118 (3)
BR300HT-R410D	320	143824 (195000)	165	1000	85	4.921 (125)	4.724 (120)	24.803 (630)	18.898 (480)	16.260 (413)	22.047 (560)	24-M24	2-M24	3.937 (100)	409.2 (186)	18.110 (460)	0.315 (8)	0.118 (3)
BR300HT-R410WB	320	184390 (250000)	165	1000	85	8.268 (210)	8.268 (210)	24.803 (630)	18.898 (480)	16.260 (413)	22.047 (560)	24-M24	2-M24	5.827 (148)	690.8 (314)	18.110 (460)	1.142 (29)	0.118 (3)
BR300HT-R410WD	320	269947 (366000)	165	1000	85	8.661 (220)	8.661 (220)	24.803 (630)	18.898 (480)	16.260 (413)	22.047 (560)	24-M30	2-M30	7.874 (200)	712.8 (324)	18.110 (460)	0.315 (8)	0.118 (3)

Notes: 1. T.C.=Torque Capacity. The maximum transmissible torque is twice the T.C.
2. Keyway size is not listed in the table. Keyway size is per ISOR773 DIN6885.1 unless the bore is preceded by an asterisk (*).
If bore is preceded by an asterisk, keyway is per DIN6885.3.
3. Minimum overrunning speed of inner race should not be below listed value during continuous operation.
4. Max. engagement speed must not be exceeded when transmitting torque.

Calculated Wear Life

LIFE OF CAM CLUTCH

Regarding Cam Clutch life, there are two conditions that have a major impact. These are listed below. When assessing the expected lifetime of the Cam Clutch it is important to consider these in relation to the actual application:

1. Overrunning abrasion (wear) life
2. Engagement fatigue life
   When assessing the expected lifetime of the Cam Clutch, it is important to consider the above conditions in relation to the actual application.

Overrunning abrasion (wear) life

*When the Cam Clutch overruns:
On the contact surfaces of cams and races, skids occur in direct proportion to the overrunning rotational speed. Therefore it is important to pay particular attention to abrasions at the contact points. As the contact pressure by the weak spring force F is low, with sufficient lubrication, these parts will not wear or abrade in a short time. Though it may vary depending on the lubricating condition, the right graph shows the calculated abrasion life, which has been properly lubricated based on the instructions provided in the catalog. Abrasion life must be verified especially for applications involving high speed and long overrunning periods.

Engagement fatigue life

*When the Cam Clutch engages:
At the contact surfaces of cams and races, the compression stress occurs in direct proportion to engagement torque. Contact surface of inner/outer races move infinitely with respect to each engagement, while that of the cams are almost stable. Therefore, the fatigue caused by this stress will then result in the surface pitting of cams.

Refer to the fatigue life curve, and check the expected life.

Note:
In cases where the load applied to the Cam Clutch changes, or where vibrational loads are encountered, repeated torque loads can be applied during a single clutch engagement. The Variable Load Torque Graph shows the type of repetitive torque loads which can be applied to the Cam Clutch in these cases. Repeated torque loads during a single clutch engagement can have the effect of increasing the overall torque load, and this must also be considered when determining Cam Clutch service life.

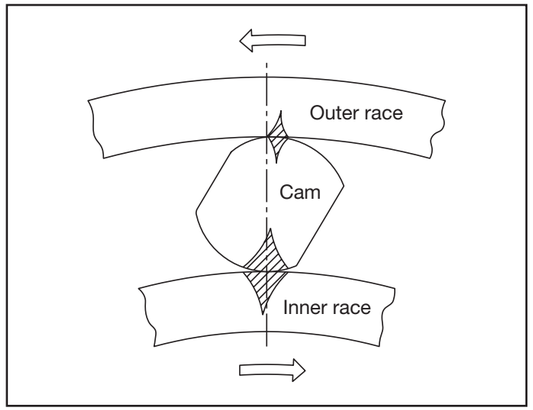

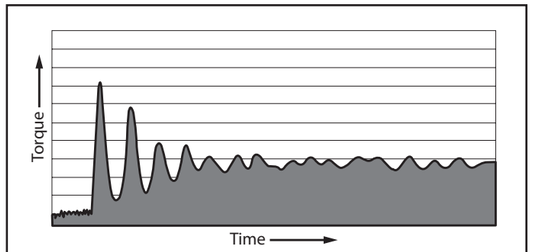

Variable Load Torque Graph

Fatigue Service Life Graph

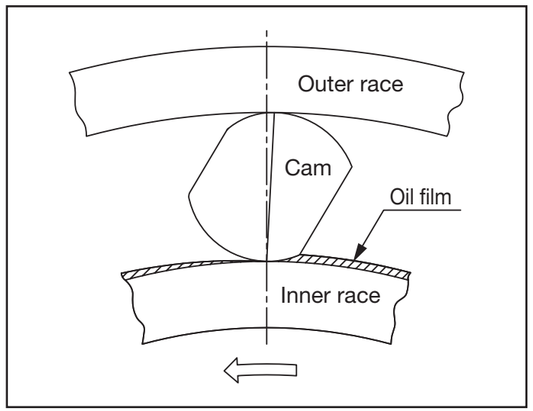

LIFE OF BREU/BR-HT SERIES CAM CLUTCH

The service life of previous TSUBAKI Cam Clutch was determined as the frictional service life during free-running (clutch disengaged) and the fatigue service life of the engaged clutch. However, with the BR Series, free-running frictional service life is not a factor because there is no mechanical contact when the clutch is disengaged. As a result, service life is determined solely by the fatigue life of the engaged clutch.

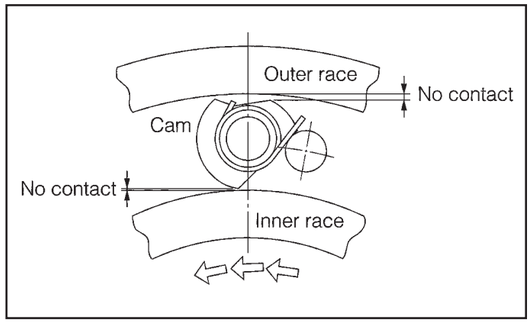

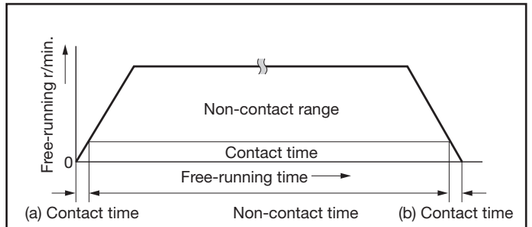

Friction in the clutch mechanism only occurs during a very short period of time denoted by “a” and “b”. “a” is the time during which the cam is engaged until the acceleration of inner race causes it to disengage. “b” is the time during which the cam engages when the inner race decelerates.

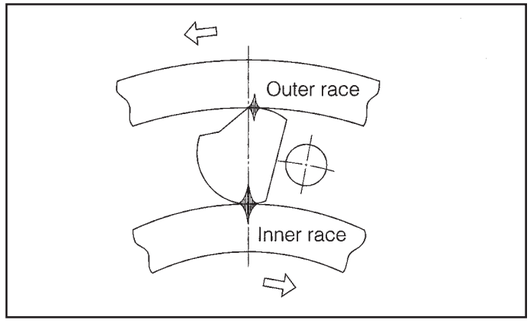

Calculated Service Life

BS/BS-R Series

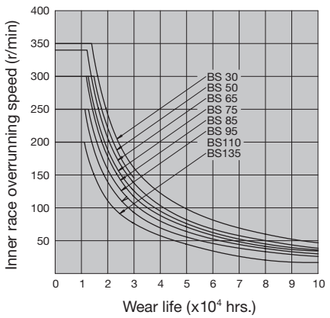

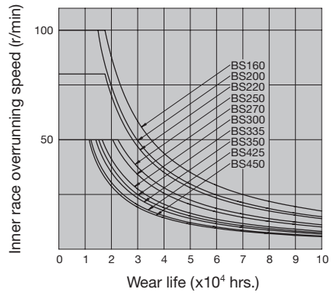

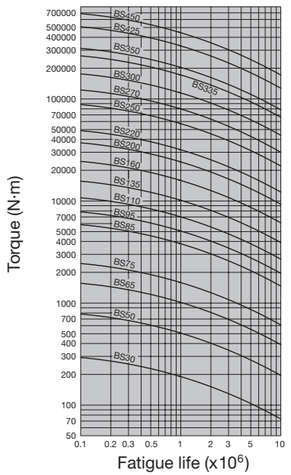

BS-HS Series

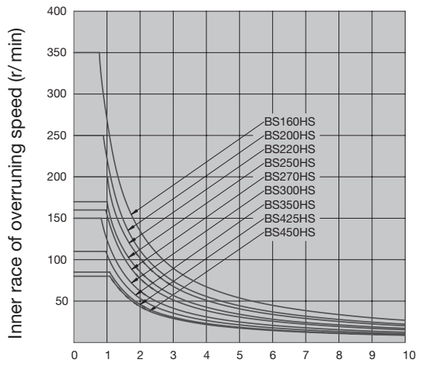

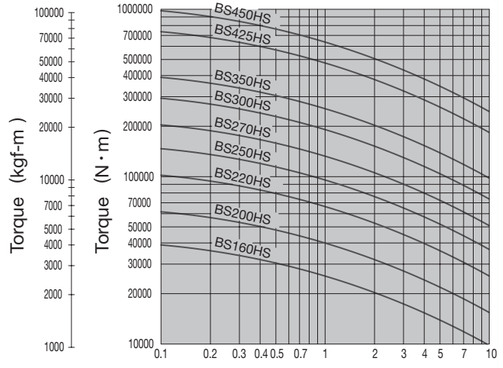

BSEU Series

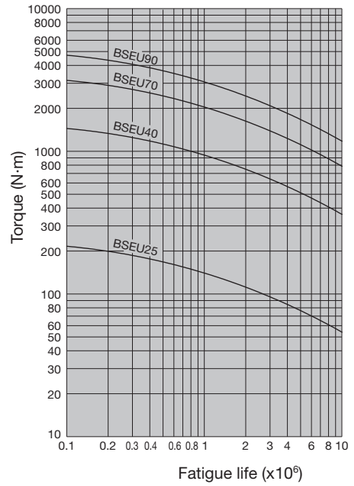

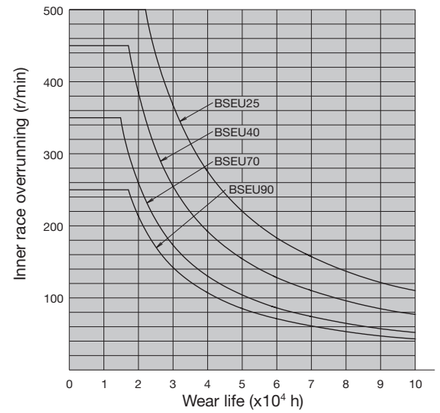

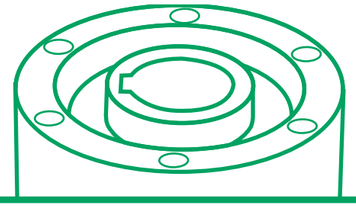

SHAFT TOLERANCE GUIDE

The chart below applies to:

BR-HT Series BS Series BSEU Series BS-HS Series BS-R Series

Recommended Bore and Shaft Tolerance	
Clutch Bore	Shaft Fit Guide
0 to 1.20 inches dia. 0 to 30 mm dia.	Line fit to .0008 inches loose (0.020 mm)
1.20 to 2.00 inches dia. 30 mm to 50 mm dia.	Line fit to .0010 inches loose (0.025 mm)
2.00 to 3.15 inches dia. 50 mm to 80 mm dia.	Line fit to .0012 inches loose (0.030 mm)
3.15 to 4.70 inches dia. 80 mm to 120 mm dia.	Line fit to .0014 inches loose (0.036 mm)
4.70 to 7.10 inches dia. 120 mm to 180 mm dia.	Line fit to .0016 inches loose (0.041 mm)
7.10 to 9.85 inches dia. 180 mm to 250 mm dia.	Line fit to .0018 inches loose (0.046 mm)
9.85 to 12.40 inches dia. 250 mm to 315 mm dia.	Line fit to .0020 inches loose (0.051 mm)
12.40 to 15.70 inches dia. 315 mm to 400 mm dia.	Line fit to .0023 inches loose (0.058 mm)
15.70 to 17.72 inches dia. 400 mm to 450 mm dia.	Line fit to .0025 inches loose (0.064 mm)

Note: Additional information and instruction manuals are available on our web site.

BACKSTOP APPLICATION REQUEST FORM

Date: / /	Name of contact:
Company name:	Tel:
Address:	Fax:
	E-mail:

For Belt Conveyor

1. Net weight of moving parts of the conveyor or width of belt:	kg mm
2. Velocity of conveyor:	m/min
3. Max. possible load:	tons/hour
4. Total lift:	m
5. Horizontal distance between head pulley and tail pulley:	m
6. Modification coefficient for l = 49 m (normally used):	
7. Shaft speed on which the clutch is mounted:	r/m

For Bucket Elevator

1.Total lift:	
2. Pitch circle dia. of head sprocket:	m
3. Possible max load:	tons/hour
4. Velocity of conveyor:	m/min

For Motor Stall Torque Method

1. Motor name plate:	kW
2. Shaft speed:	r/min
3. Stall torque percentage:	%

Motor:		kW
Horsepower:	HP, at	r/m
Shaft bore:		
Maximum torque at clutch (excluding SF):		
Clutch oparating time:		hours/day
Ambient Temp.:		
Exposed to:	Dirt	
	Other ( )	
Key size:		
Quantity required:		
Power eource:	Electric motor	
	Diesel engine	
	Petrol engine	
	Other ( )	

Please provide layout if possible.

⚠ WARNING

USE CARE TO PREVENT INJURY COMPLY WITH THE FOLLOWING TO AVOID SERIOUS PERSONAL INJURY:

1. Guards must be provided on all chain and sprocket installations in accordance with provisions of ANSI/ASME B15.1 - 2000 “Safety Standards for Mechanical Power Transmission Apparatus,” and ANSI/ASME B20.1 - 2012 “Safety Standards for Conveyors and Related Equipment,” or other applicable safety standards. When revisions of these standards are published, the updated edition shall apply.

2. Always lock out the power switch before installing, removing, lubricating or servicing a system which uses a PTUC product.

3. When connecting or disconnecting PTUC products, eye protection is required. Wear safety glasses, protective clothing, gloves and safety shoes.

4. Improper installation or mounting, as well as operating conditions and maintenance, can affect the performance of a Cam Clutch. The Cam Clutch should be inspected regularly.

“PTUC is used by U.S. Tsubaki to designate “Power Transmission Unit Components.” PTUC products include Cam Clutch, DISCO, POWER-LOCK®, Shock Relay, Gearmotor, HF Drive, Shock Damper, Power Cylinder™, Couplings, SCR variable speed motor and other like products manufactured by/for Tsubaki.

TSUBAKI®

www.ustsubaki.com



Corporate Headquarters
U.S. Tsubaki Power Transmission, LLC
301 E. Marquardt Drive
Wheeling, IL 60090
Tel: (800) 323-7790
Fax: (847) 459-9515
www.ustsubaki.com



Roller Chain Division
821 Main Street
Holyoke, MA 01040
Tel: (800) 323-7790



Conveyor and Construction
Chain Division
1010 Edgewater Drive
Sandusky, OH 44870
Tel: (800) 537-6140
Fax: (419) 626-5194



Canadian Headquarters
Sprocket Manufacturing
1630 Drew Road
Mississauga, ON L5S 1J6
Tel: (800) 263-7088



KabelSchlepp Division
7100 W. Marcia Rd
Milwaukee, WI 53223
Tel: (800) 443-4216
Fax: (414) 354-1900

NOTE: IN ACCORDANCE WITH THE POLICY OF U.S. TSUBAKI POWER TRANSMISSION, LLC TO CONSISTENTLY IMPROVE ITS PRODUCTS, THE SPECIFICATIONS IN THIS CATALOG ARE SUBJECT TO CHANGE WITHOUT NOTICE.

®2014 U.S. Tsubaki Power Transmission, LLC.
All Rights Reserved. Printed in U.S.A.
07/14 Rev. 0 L14016