U.S. Tsubaki Power Transmission, LLC
301 E. Marquardt Dr.
Wheeling, IL 60090

Phone: 847.459.9500 or 800.323.7790
Fax: 847.459.9515
Email: sales@ustsubaki.com

Website: www.ustsubaki.com

ITEM # BR90HT-B140B-110, BR-HT90-110.00 MM BORE CAM CLUTCH

BR-HT is mainly used in backstop applications as an integral part of a gear reducer. Prevention of reverse rotation for inclined conveyor and bucket elevator are typical application BR-HT assures not only the immediate backstop function under high torque, but also long service life by the “lift-off” design. In addition, installation on the high speed shaft with low torque enables selection of more compact models with resulting lower cost.



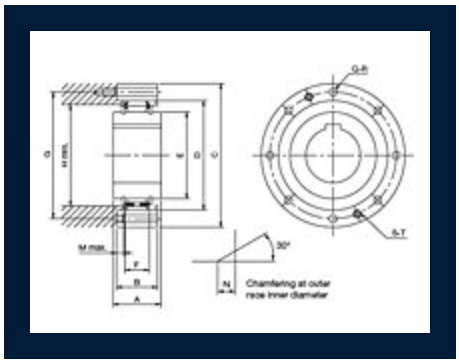

Specifications

Torque	6638.0 lb·ft 9000.0 N·m
Min. Inner Race Overrunning Speed	300 rpm
Max. Inner Race Overrunning Speed	3000 rpm
Max. Engagement	150 rpm
Bore Size	4.331 in 110.00 mm

A (Inner Race Width)	2.756 in 70.00 mm
B (Outer Race Width)	2.756 in 70.00 mm
C (Outer Race O.D.)	9.646 in 245.00 mm
D (Outer Race I.D.)	7.087 in 180.00 mm
E (Inner Race O.D.)	5.787 in 147.00 mm
G (Bolt Circle Diameter)	8.583 in 218.00 mm
Q-R (Mounting Holes Quantity - Size)	12-M12
S-T (Removed Holes Quantity - Size)	2-M12
F (Cam Width)	1.969 in 50.00 mm
Weight	44.000 lb 20.000 kg
H (Housing Bore Min.)	6.693 in 170.00 mm
M (Counter Bore Depth Max.)	0.354 in 9.00 mm
N (Chamfer)	0.079 in 2.00 mm