U.S. Tsubaki Power Transmission, LLC
301 E. Marquardt Dr.
Wheeling, IL 60090

Phone: 847.459.9500 or 800.323.7790
Fax: 847.459.9515
Email: sales@ustsubaki.com

Website: www.ustsubaki.com

ITEM # MGUS500-30, MGUS500-30 MM BORE CAM CLUTCH

MGUS Series Cam Clutch products are designed to satisfy inner or outer race overrunning/general application requirements. Depending on application requirements, the MGUS Series can be used in overrunning, indexing, or backstopping applications. This series is offered in both metric and inch based inner race configurations. MGUS Series units can easily be mated to pulleys, gears, or sprockets. MGUS Series ships pre-lubricated with oil.

Note: When placing an order for MGUS Series Cam Clutch model

more



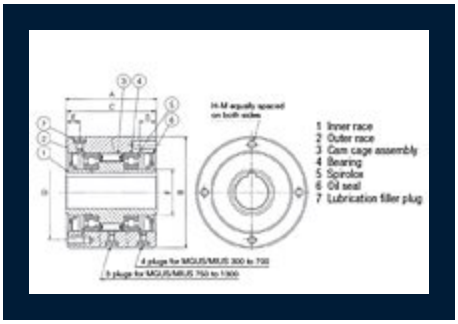

Specifications

Bore Size	1.181 in 30.00 mm
Torque Capacity	1194.8 lb·ft 1620.0 N·m
Max. Overrunning Inner Race	2400 rpm
Max. Overrunning Outer Race	800 rpm

Drag Torque	0.376 lb·ft 0.51 N·m
Bore Keyseat	10 x 3.3 mm
A (Overall Width)	3.500 in 88.90 mm
B (Overall Diameter)	4.250/4.248 in 107.95/107.90 mm
C (Inner Race Length)	3.375 in 85.85 mm
D (Pitch Circle Diameter)	3.625 in 92.08 mm
E (Cam Clutch Length)	0.484 in 12.30 mm
F (Reservoir Length)	1.748 in 44.40 mm
S	0.630 in 16.00 mm
H No. of Tapped Holes	4
M Thread	5/16-24
Oil Filler Plug	M6 x P1.0
Oil Capacity	1.70 oz 50 mL
Weight	5.000 kg 11.023 lb