U.S. Tsubaki Power Transmission, LLC
301 E. Marquardt Dr.
Wheeling, IL 60090

Phone: 847.459.9500 or 800.323.7790
Fax: 847.459.9515

Email: sales@ustsubaki.com
Website: www.ustsubaki.com

ITEM # TSS35, TSS-35 MM BORE CAM CLUTCH

TSS Series Cam Clutch is designed for press fit installation with outside dimensions the same as the 62 Series ball bearing. As a sprag clutch, higher torque capacities are often higher than a similar ramp & roller design. This design provides easy handling and installation, most often with a Series 62 ball bearing located next to the TSS Cam Clutch. The TSS Series is ideal for applications that require high speed inner race overrunning in a very compact package. This series ships pre-

more

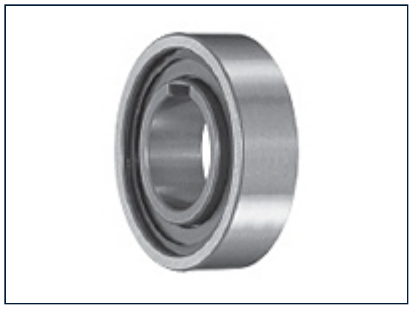

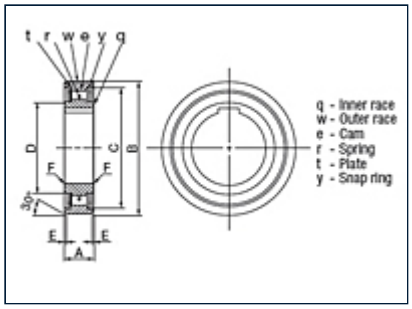

Specifications	
Bore Size	1.378 in 35.00 mm
Torque Capacity	100.3 lb·ft 136.0 N·m
Max. Overrunning Inner Race	1600 rpm

Max. Overrunning Outer Race	800 rpm
Drag Torque	0.022 lb·ft 0.03 N·m
Keyway	10 x 2.4 mm
A (Overall Width)	0.669 in 17.00 mm
B (Overall Diameter)	2.835 in 72.00 mm
C (Outer Race I.D.)	2.480 in 63.00 mm
D (Inner Race I.D.)	1.772 in 45.00 mm
E (Offset)	0.031 in 0.80 mm
F (Chamfer)	0.039 in 1.00 mm
Weight	0.660 lb 0.300 kg