SPX Bolting Systems

Operating Instructions for:
WDD Series

Unit 4, Wansbeck Business Park
Rotary Parkway
Ashington
Northumberland NE63 8QW

Tel: +44 (0) 1670 850580
Fax: +44 (0) 1670 850655
info@spxboltingsystems.com

CE

Original Instructions

WDD Bolt Tensioner



© SPX

Form No. 1000588
Rev. 0 February 1, 2012

Table of Contents

Description 3
Safety Symbols and Definitions 4
Safety Precautions 4
Initial Setup 7
Operating Instructions 9
Performance Specifications 14
General Maintenance 15
Troubleshooting Guide 16
Repair Procedures 17
Parts Lists 24
Declaration of Incorporation 31

© SPX

Form No. 1000588
Rev. 0 February 1, 2012

Description

The WDD Hydraulic Bolt Tensioner is designed to provide simple but safe tensioning operations with the added benefit of speed and reliability. The WDD tensioning tool uses a dual chamber hydraulic load cell to load standard studbolts. In operation, the tensioning tools are assembled to one or more bolts to be tightened. The tensioner is placed over the nut and screwed onto a bolt protrusion extending through the nut. Multiple tensioners can be assembled to a single joint to provide simultaneous and uniform joint compression and bolt loading.

In order to apply a load to the bolt, the pump is activated and a predetermined pressure is applied to the system. As the tensioners apply load to each bolt, the nuts are lifted from the joint surface as the bolt stretches due to the load. While the tensioner system pressure is maintained, each of the flange nuts are tightened back down against the joint face. Upon release of the system pressure, the load is retained/trapped in each bolt.

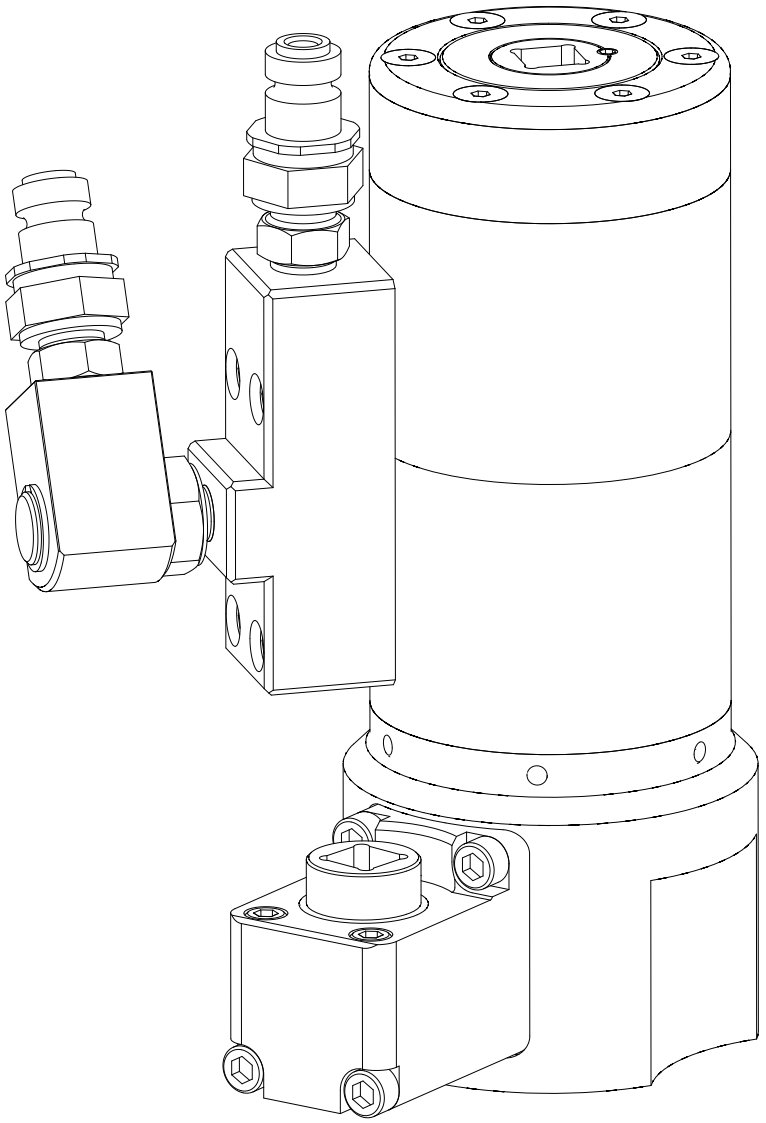

Figure 1. WDD Tensioning Tool

© SPX

Form No. 1000588
Rev. 0 February 1, 2012

Safety Symbols and Definitions

The safety signal word designates the degree or level of hazard seriousness.

DANGER: Indicates an imminently hazardous situation which, if not avoided, will result in death or serious injury.

WARNING: Indicates a potentially hazardous situation which, if not avoided, could result in death or serious injury.

CAUTION: Indicates a potentially hazardous situation which, if not avoided, may result in minor or moderate injury.

CAUTION: Used without the safety alert symbol indicates a potentially hazardous situation which, if not avoided, may result in property damage.

IMPORTANT: Important is used when action or lack of action can cause equipment failure, either immediate or over a long period of time.

Safety Precautions

WARNING: To prevent personal injury,



- **The following procedures must be performed by qualified, trained personnel who are familiar with this equipment. Operators must read and understand all safety precautions and operating instructions included with the device. If the operator cannot read these instructions, operating instructions and safety precautions must be read and discussed in the operator's native language.**
- **These products are designed for general use in normal environments. These products are not designed for use in special work environments such as: explosive, flammable, or corrosive. Only the user can decide the suitability of this product in these conditions or extreme environments. Power Team will supply information necessary to help make these decisions. Consult your nearest Power Team facility.**







- **Safety glasses must be worn at all time by the operator and anyone within sight of the unit. Additional personal protection equipment may include: face shield, goggles, gloves, apron, hard hat, safety shoes, and hearing protection.**
- **The owner of this tool must verify that safety-related decals are installed, maintained, and replaced if they become hard to read.**
- **Shut OFF the motor before opening any connections in the system.**

Pump

WARNING: To prevent personal injury,

- **Do not exceed the hydraulic pressure rating noted on the pump nameplate or tamper with the internal high pressure relief valve. Creating pressure beyond rated capacities can result in personal injury.**
- **Retract the system before adding fluid to prevent overfilling the pump reservoir. An overfill can cause personal injury due to excess reservoir pressure created when cylinders are retracted.**

© SPX

Form No. 1000588
Rev. 0 February 1, 2012

Electric Motor

WARNING: To prevent personal injury,



- **Electrical work must be performed and tested by a qualified electrician per local directives and standards.**
- **Disconnect the pump from the power supply and relieve pressure before removing the motor case cover or performing maintenance or repair.**
- **Check the total amperage draw for the electrical circuit you will be using. *For example: Do not connect a pump that may draw 25 amps to a 20 amp fused electrical circuit.***
- **Never use an ungrounded power supply with this unit.**
- **Changing the voltage is an involved and, if incorrectly performed, hazardous procedure. Consult the manufacturer for specific information before attempting rewiring.**
- **Wire pump motors for counterclockwise rotation when viewed from the shaft end of the motor.**



- **Do not attempt to increase the power line capacity by replacing a fuse with another fuse of higher value. Overheating the power line may result in fire.**
- **Exposing electric pumps to rain or water could result in an electrical hazard.**
- **Avoid conditions that can cause damage to the power cord, such as abrasion, crushing, sharp cutting edges, or corrosive environment. Damage to the power cord can cause an electrical hazard.**

Hoses

WARNING: To prevent personal injury,

- **Before operating the pump, tighten all hose connections using the correct tools. Do not overtighten. Connections should be only secure and leak-free. Overtightening can cause premature thread failure or high pressure fittings to split at pressures lower than their rated capacities.**



- **Should a hydraulic hose rupture, burst, or need to be disconnected, immediately shut off the pump and shift the control valve twice to release pressure. Never attempt to grasp a leaking hose under pressure with your hands. The force of escaping hydraulic fluid could cause serious injury.**



- **Do not subject the hose to potential hazard, such as fire, sharp surfaces, heavy impact, or extreme heat or cold. Do not allow the hose to kink, twist, curl, or bend so tightly that the fluid flow within the hose is blocked or reduced. Periodically inspect the hose for wear, because any of these conditions can damage the hose and possibly result in personal injury.**
- **Do not use the hose to move attached equipment. Stress can damage the hose and possibly cause personal injury.**
- **Hose material and coupler seals must be compatible with the hydraulic fluid used. Hoses also must not come in contact with corrosive material such as creosote-**

© SPX

Form No. 1000588
Rev. 0 February 1, 2012

impregnated objects and some paints. Consult the manufacturer before painting a hose. Never paint the couplers. Hose deterioration due to corrosive materials may result in personal injury.

© SPX

Form No. 1000588
Rev. 0 February 1, 2012

Initial Setup

Each tensioner is supplied completely assembled and ready for use. A hydraulic pump is required to provide the speed and pressure that makes the tensioner system efficient and accurate.

1. Read and understand all instructions before operating the tensioner. It is the operator's responsibility to read, understand, and follow all safety instructions.
2. Remove the tensioner from the shipping container and visually inspect all components for any shipping damage. If any damage is found, notify the carrier immediately. **DO NOT USE TOOL.**

Hydraulic Connections

- Never connect or disconnect any hydraulic hoses or fittings without first unloading the tensioner and the pump.
- Open all hydraulic controls several times to verify the system has been completely depressurized.
- If the system includes a gauge, double check the gauge to verify pressure has been released.
- When making connections with quick-disconnect coupling, verify the couplings are fully engaged. Threaded connections such as fittings, gauges, etc., must be securely tightened and leak-free.

Galvanized Studbolts

In order to offer corrosion protection, studbolts and nuts may be hot dipped galvanised (zinc coated). In general, the process of hot dipped galvanising involves manufacturing the bolts to the lower tolerance and the nuts to the upper tolerance, the nuts then re-tapped after coating to fit the bolts. The nature of this process generally results in uneven coating thickness and often thicker deposits accumulating at the root of the threads.

Hot dipped galvanised studbolts can present problems for bolt tensioners due to the studbolts being oversize as a result of the coating. It may be difficult to attach the tensioner onto some, if not all galvanised bolts. If this is the case, oversize Puller Bars for the tensioner manufactured specially for galvanised bolts are required. Contact the Supplier for availability.

Never force the tensioner onto a galvanised studbolt and do not attempt to modify or re-cut the Puller Bar thread.

Safety

The tensioner is a high-power hydraulic tool. It is strongly recommended that all users are fully trained and competent in the use of tensioner systems. Incorrect use of the equipment or failure to follow any of the safety precaution included herein could lead to serious injury.

NOTE: The tensioner is designed for the tightening and loosening of bolts and studbolts only. Do not use it for any other purpose.

- Never exceed the tensioning tool maximum working pressure of 1350 bar (19,580 psi)
- Verify the studbolt protrusion is set to the specified length.
- Verify the threaded Puller Bar is the correct thread form and size, and is correct for the hydraulic cell to be used.
- Verify the hydraulic cell is correctly assembled onto the bridge.
- When assembling the tensioning tool to the flanged joint, verify the bridge sits squarely on the flange

face and does not damage the flange hub or adjacent bolting.

- Check that hoses are in good condition and undamaged. When assembling the hydraulic hoses do not kink or bend hoses beyond their safe bend radius limit.
- Do not pressurize unconnected quick connect couplings.
- Take care when handling equipment. Quick connect couplings are especially susceptible to knocks and damage. Damaged couplings are difficult to connect. Do not force couplings.
- Do not tighten any equipment while under pressure.
- Stand to the side of the tensioning tools while under pressure. Do not work over the top of the tensioning tool.
- Keep the system under pressure for as short a time as possible. Fully understand operating procedures before starting to keep operating time to a minimum.
- Keep other personnel clear of the working area and only allow trained personnel to use the equipment. Rope off the working area when possible.
- Only use pumps, hoses, tensioners, etc, which were supplied by the manufacturer or distributor. Verify the equipment is certified for the specific working pressures.
- Only use the manufacturer's genuine parts for repairs and servicing. Repairs should only be carried out by the manufacturer.
- Do not strike, misuse or abuse any of the equipment. If any abuse or misuse of the equipment is evident, the warranty shall be invalid and the manufacturer shall not be responsible for any injuries or failures as a result.
- If not in use, and when practical, disconnect the pump from the power supply to prevent accidental starting. Also verify tensioning tools are not pressurized.

© SPX

Form No. 1000588
Rev. 0 February 1, 2012

Studbolt Preparation

Performing a few simple checks before the tools are applied can prevent potential problems and wasted time during the tensioning operation. It is recommended the following studbolt preparations and checks be performed before the tensioning tools are assembled.

- In order to accommodate the WDD Tensioning system, there must be a thread protrusion above the hex nut, and it must be within the following limits.

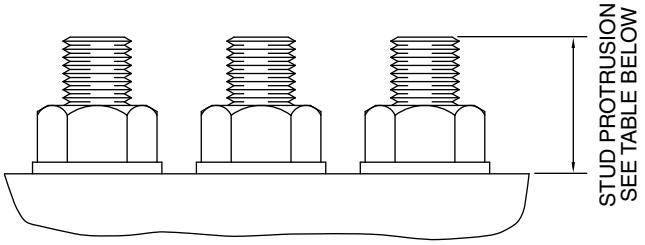

Figure 2. Studbolt Length

TOOL REF	BOLT SIZE	STUD PROTRUSION	
		MIN	MAX
WDD1-M30	M30	63 mm	70 mm
WDD2-M33	M33	67 mm	74 mm
WDD3-M36	M36	71 mm	80 mm
WDD4-M39	M39	72 mm	86 mm
WDD5-M42	M42	80 mm	92 mm

Table 1. Studbolt Sizes

- Check that the tensioner threaded collar is of the same thread size and form as that of the bolt to be tightened (the thread size and form are engraved onto the bottom face of the collar). Verify that the tensioner is free running on the bolt thread protrusion.

If possible, check that the hex nut on the side of the bolt protrusion is free running over at least 20mm of thread.

Assembling the Tools onto the Bolt/Flange

Prior to using the tensioning tool the following checks should be performed before and during operation:

1. Verify the tensioning tools (hydraulic cell, puller bar and bridge) are correct for the bolts to be tensioned.
2. Verify the hydraulic cell pistons are fully retracted
3. Place the bridge around the nut making sure it sits squarely on the joint surface, with the bridge positioned such that the gearbox can be easily accessed. Should the tensioner fail to contact the joint surface during assembly, remove and check for correct stud protrusion.
4. Visually examine the assembly checking that no part of the tensioner fouls the flange hub taper, welds, etc or the adjacent nuts and bolts. If there is interference between flange and tensioner the tensioner assembly must either be repositioned or an alternative tensioner used.

© SPX

Form No. 1000588
Rev. 0 February 1, 2012

5. Connect the hose from the pump unit to the hydraulic coupling on the tensioning tool. If more than one tensioning tool is assembled onto the flange, interconnect each tensioning tool in series such that all tensioning tools will be pressurised at the same time.

Multiple Tool Connection

NOTE: Do not bend hoses too tightly.

NOTE: All hoses are fitted with self-sealing quick connect couplings that prevent hydraulic fluid from flowing through the coupling unless fully connected. Therefore, it is important to verify the female coupling is fully engaged with the male coupling before pressurizing the system.

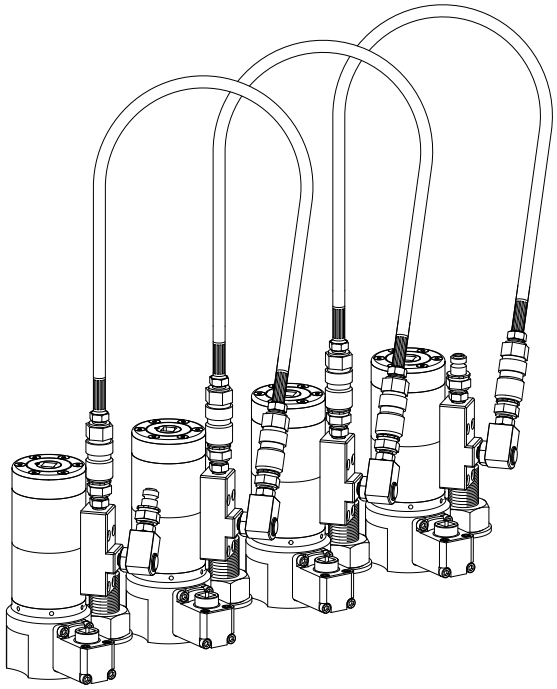

Figure 3. Multiple Connection

Piston Overstroke Prevention

The WDD tensioner includes a built-in overstroke prevention mechanism which causes the piston to lock at the maximum indicated stroke, preventing further piston movement. At this point a yellow piston stroke indicator band will be clearly visible above the tensioner top washer.

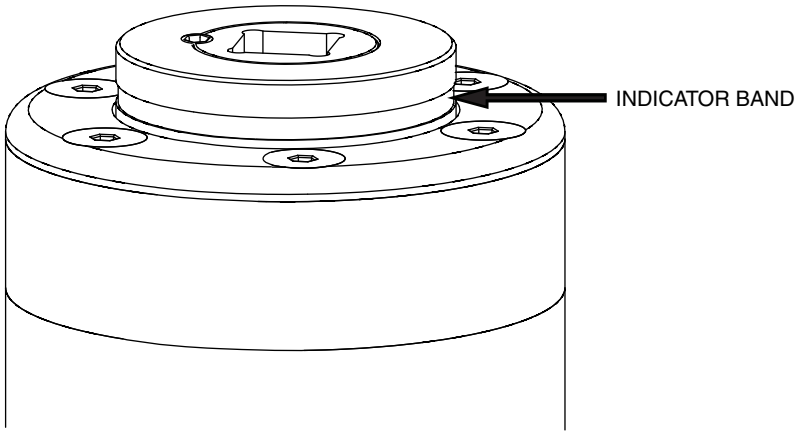

Figure 4. Indicator Band

During a tensioning operation, if the yellow piston stroke indicator band becomes visible, stop the pump unit, turn down the flange nuts, release system pressure. After the tensioner has retracted, reset the tensioner against the joint surface and continue with the tensioning operation.

© SPX

Form No. 1000588
Rev. 0 February 1, 2012

1. Apply tensioning tool to stud.

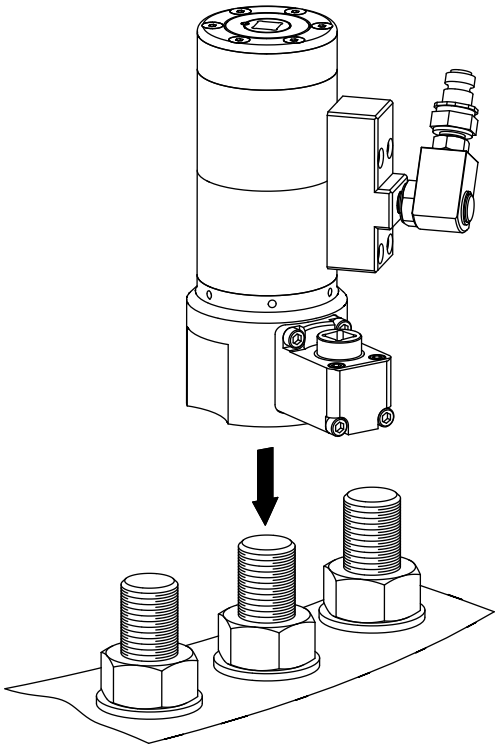

Figure 5. Applying Tool

2. Using 1/2" sq. drive manual wrench or similar, rotate central puller bar until tensioner contacts the joint face.

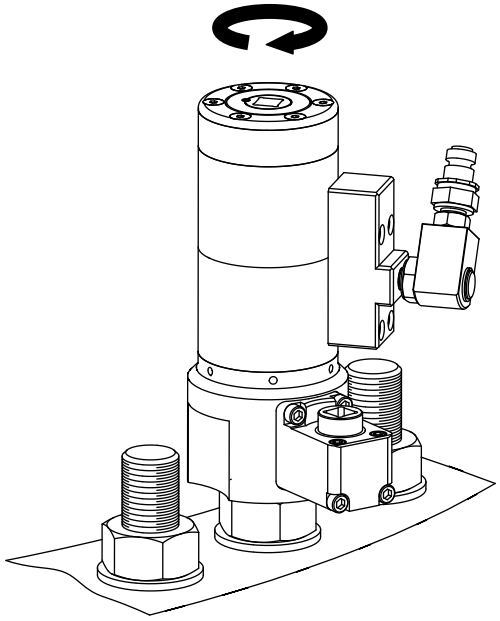

Figure 6. Seating Tool

3. Verify the nut rotator is properly engaged around the nut. Rotate the gearbox drive until the nut rotator snaps down into position. When correctly engaged, the nut rotator external gear should NOT be visible through the viewing hole.

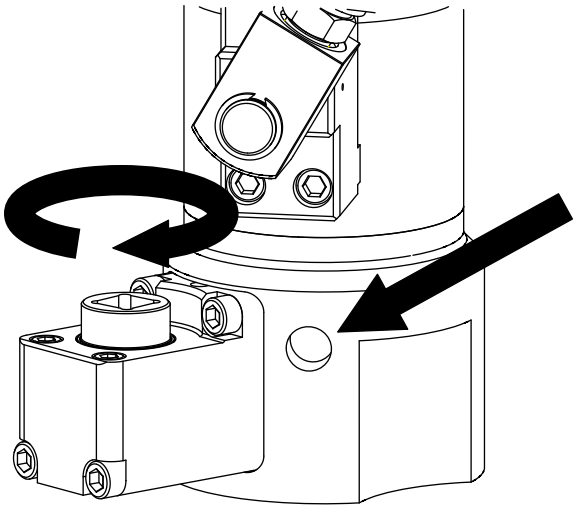

Figure 7. Adjusting Rotator

4. Attach the hose (or hoses if multiple tools are used). If fitted, verify hose coupling locking collars are fully tightened up.

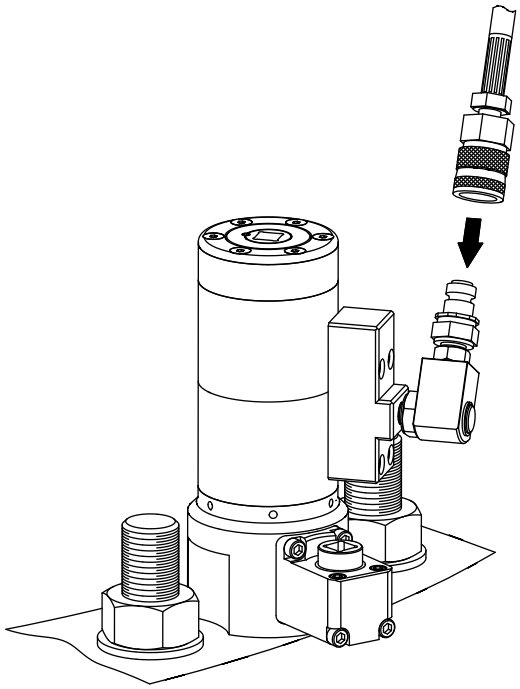

Figure 8. Attaching Hose

© SPX

Form No. 1000588
Rev. 0 February 1, 2012

5. Slowly apply the pre-determined pressure to achieve desired bolt load.

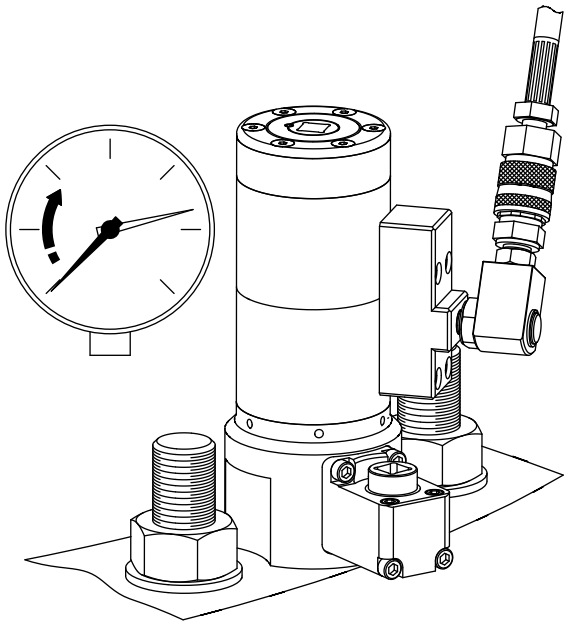

Figure 9. Apply Pressure

6. Hold pressure and turn down nuts using gearbox. Turn clockwise to tighten. MAX TORQUE 30Nm

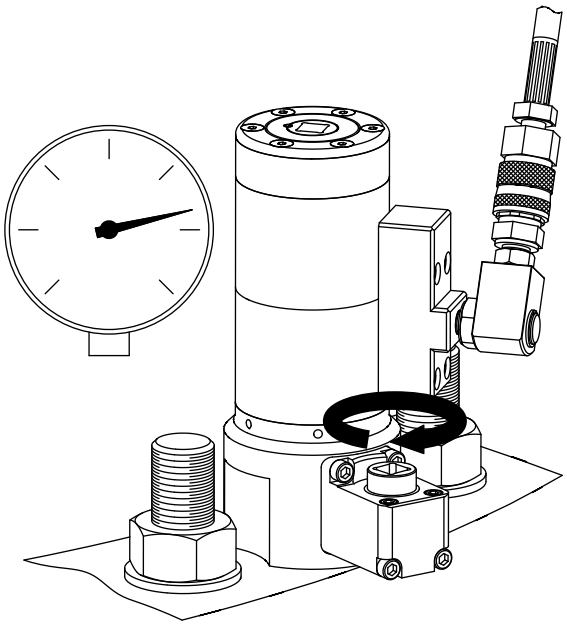

Figure 10. Hold Pressure

7. Slowly release system pressure.
8. Repeat steps 5-7 two more times to generate accurate bolt load.

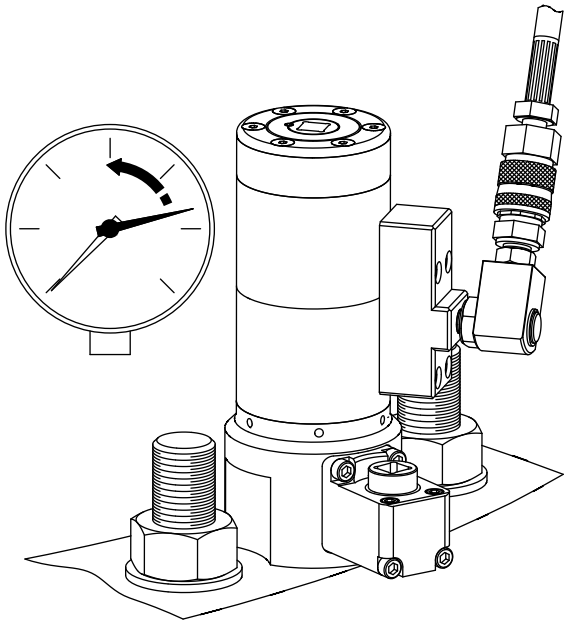

Figure 11. Release Pressure

9. Allow tensioner piston to fully retract.

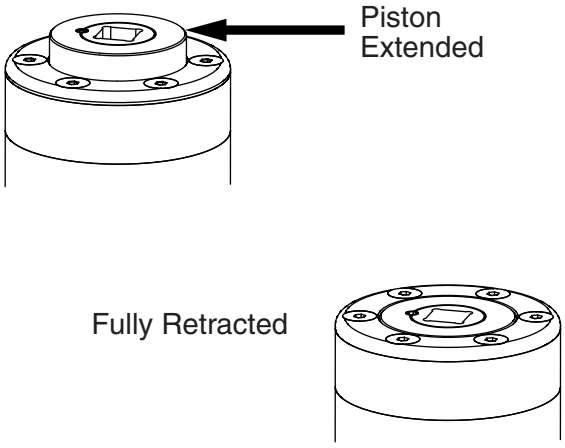

Figure 12. Piston

10. Unscrew and remove tensioning tool.

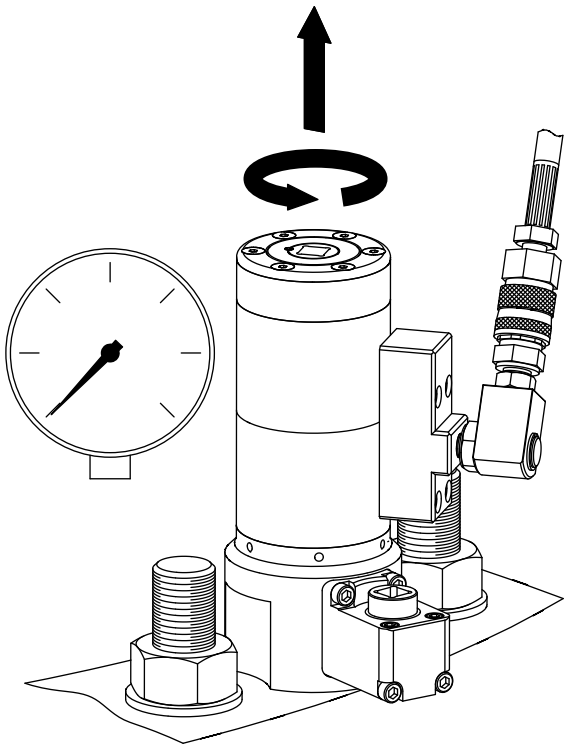

Figure 13. Remove Tool

© SPX

Performance Specifications

Technical Specifications

The following data is applicable to the WDD Hydraulic Bolt Tensioner:

TENSIONER DESIGN: Dual chamber, spring assisted piston retract.
MAXIMUM PRESSURE: 1350 bar (19,580 psi)
OPERATING TEMPERATURE LIMITS: -20°C to +50°C

Tool	Ref Bolt Size	Stud Prot	Stroke	Max Load	Hyd. Area	Weight
WDD1-M30	M30	63 - 70 mm	7 mm	467 kN	3458 sq.mm	6.70 kg
WDD2-M33	M33	67 - 74 mm	7 mm	569 kN	4215 sq.mm	7.60 kg
WDD3-M36	M36	71 - 80 mm	10 mm	671 kN	4970 sq.mm	9.25 kg
WDD4-M39	M39	72 - 86 mm	10 mm	801 kN	5931 sq.mm	11.10 kg
WDD5-M42	M42	80 - 92 mm	10 mm	926 kN	6856 sq.mm	12.60 kg

© SPX

Form No. 1000588
Rev. 0 February 1, 2012

General Maintenance

Storage and Maintenance

In order to keep the tensioning system in good working condition, it is recommended post use maintenance be performed following each period of use.

TENSIONING TOOLS - POST USE MAINTENANCE

Post use maintenance can be performed as follows:

1. Verify all tensioning tool pistons are fully retracted. The pistons may be retracted by connecting to the pump unit and allowing the hydraulic oil to drain back to tank.
2. Clean any debris from the surfaces of tensioning tools and bridges using a clean cloth. Clean tensioner Puller Bar internal threads.
3. Spray all components with a water-repellent spray.

HYDRAULIC HOSES - POST USE MAINTENANCE

1. Clean and inspect each hydraulic hose and quick connect coupling. Check the entire length of the hose for cuts, abrasions and damage. Any evidence of hose damage and the entire hose must be replaced.
2. Coat each quick connect coupling with a water repellent spray, retracting and releasing the collars several times to promote correct operation and saturation of repellent spray.

© SPX

Form No. 1000588
Rev. 0 February 1, 2012

Troubleshooting Guide

PROBLEM	CAUSE	SOLUTION
Tensioner will not advance. Tensioner will not retract.	1. Coupling not fully mated. 2. Tensioner seal leakage. 3. Pump unit. 4. Faulty coupling.	1. Check coupling. 2. Replace seal. 3. Check pump unit. 4. Replace coupling.
Pressure will not build.	1. Tensioner seal leakage. 2. Defective pump unit.	1. Change seals. 2. Check pump unit.
Pressure builds, but tensioner does not move.	1. Hose restriction. 2. Coupling not fully assembled.	1. Change hose. 2. Fully tighten coupling.
Slow tensioner operation.	1. Hose restriction. 2. Coupling not fully assembled. 3. Pump flow rate too small.	1. Change hose. 2. Fully tighten coupling. 3. Use higher flow pump.
Difficulty in hose connection.	1. Pressure within hose. 2. Damaged coupling.	1. Vent hose. 2. Replace coupling.

© SPX

Form No. 1000588
Rev. 0 February 1, 2012

TENSIONER PULLER BAR INSPECTION

Due to the nature of operation of the Puller Bar, it is recommended that it should be regularly inspected for signs of damage, wear and cracks. Pay particular attention to the threaded portions, both inside and out. The Puller Bar Assembly should be replaced if any dents, score marks or cracks are evident, as these can be potential stress raisers and could lead to component failure.

GENERAL SERVICING

It is recommended that servicing is performed on an annual basis. The manufacturer or approved service agent should carry out any repairs and annual servicing. All components shall be inspected and critical components subjected to non-destructive testing where appropriate. Hydraulic cells will be pressure tested and issued with Test Certification.

Although it is possible to inspect and replace tensioner components on-site, it is recommended that this operation be carried out in a clean workshop environment, as exposure to dirt and debris can severely affect the performance of the seal and tensioning tool. Eye protection should be worn at all times during tool dis-assembly.

NOTE: If more than one tensioning tool is to be disassembled, be aware that each tensioning tool uses matched parts, and are marked accordingly with an identification number. Please verify parts from other tensioners are not mixed.

1. Verify that the pistons are fully retracted. If the piston is not fully retracted, re-connect to the pump unit and allow the hydraulic oil to drain to tank.

WARNING: If the piston is not fully retracted, stored energy may exist within the hydraulic cell due to spring load. If a hydraulic coupling is removed, pressurised hydraulic oil may be ejected.

2. Remove the 4 hydraulic manifold retaining screws, and lift away the manifold. Discard the port o-ring seals.

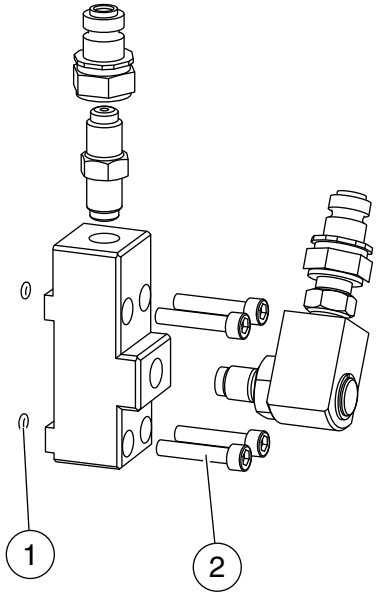

Item	Description
1	Port O-ring Seals
2	Manifold Retaining Screws

Figure 14. Manifold Screws

3. Remove the 6 top plate screws gradually. The top plate is spring loaded, but will gradually unload as the screws are unscrewed.

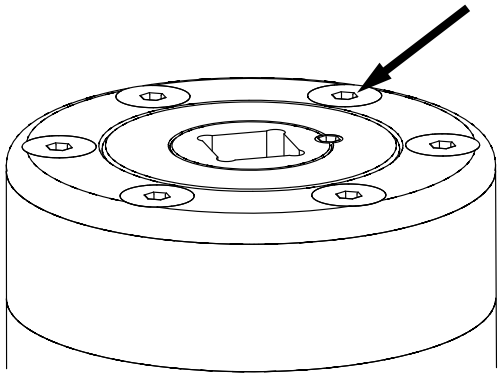

Figure 15. Top Plate Screws

© SPX

Form No. 1000588
Rev. 0 February 1, 2012

4. Remove the springs and spring pins.

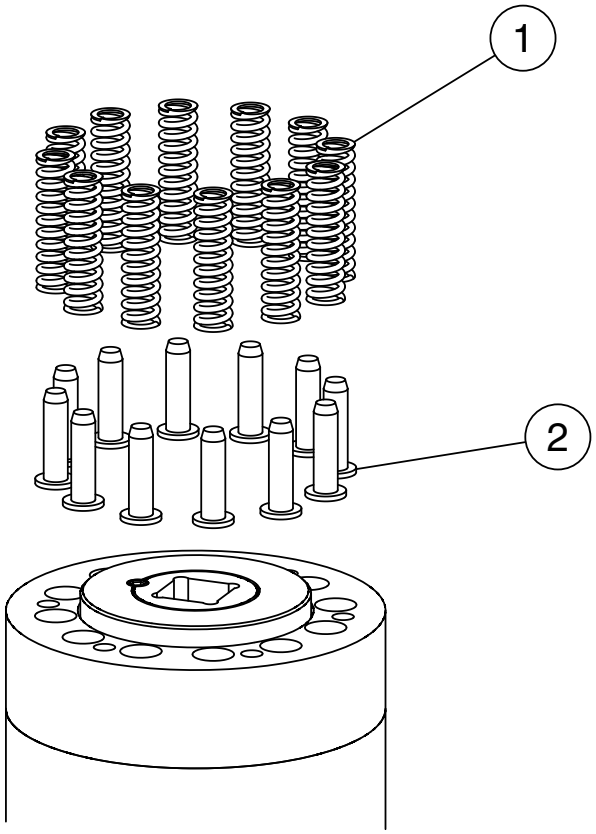

Item	Description
1	Springs
2	Spring Pins

Figure 16. Springs and Spring Pins

5. Unscrew and remove the cap. Lift out the washer.

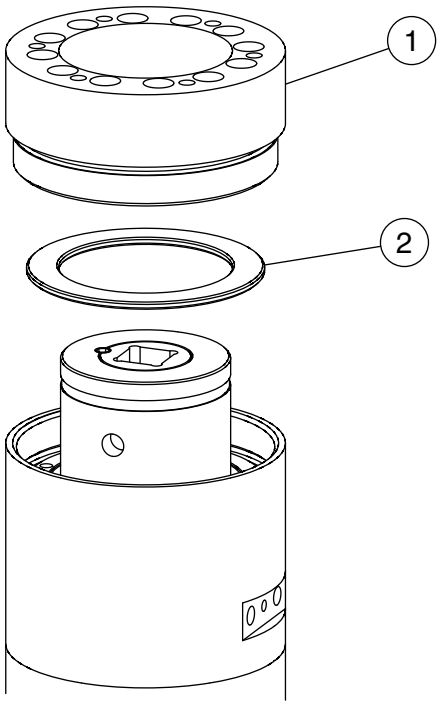

Item	Description
1	Cap
2	Washer

Figure 17. Upper Cylinder Cap

© SPX

6. Remove the socket setscrew from the surface of the upper reaction nut / puller bar assembly. unscrew and remove the upper reaction nut.

NOTE: The upper reaction nut and puller bar are a matched pair and cannot be interchanged.

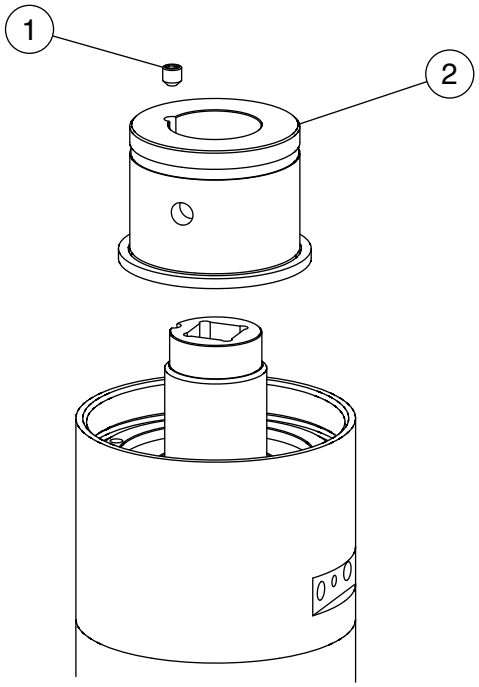

Item	Description
1	Socket Setscrew
2	Upper Reaction Nut

Figure 18. Upper Reaction Nut

7. Unscrew the upper cylinder from the lower cylinder.

NOTE: The upper and lower cylinder are a matched pair and cannot be interchanged.

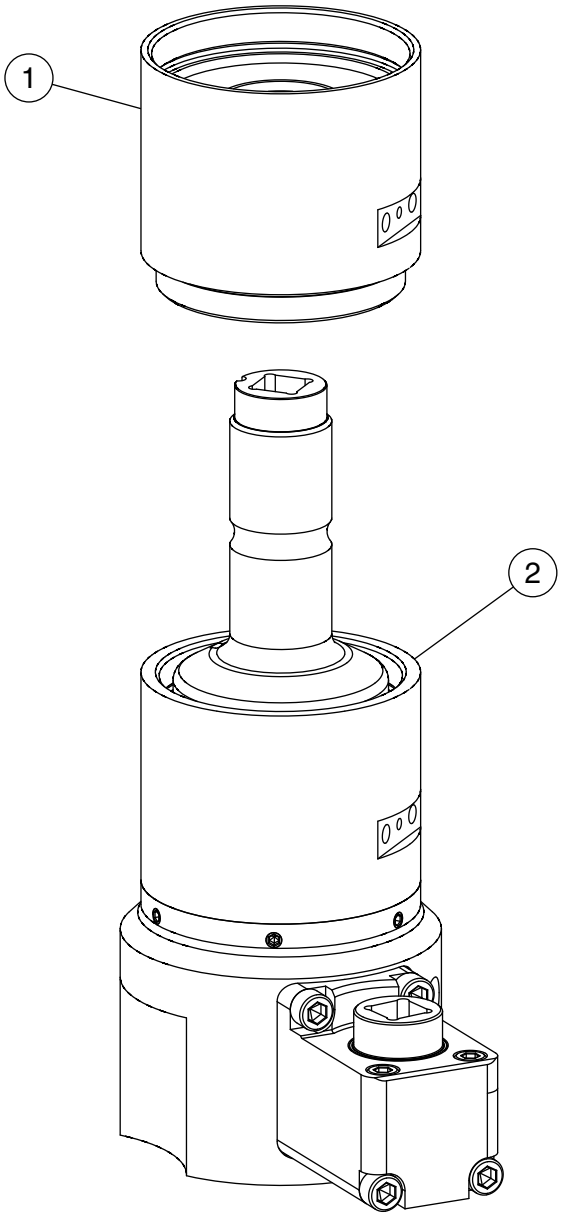

Item	Description
1	Upper Cylinder
2	Lower Cylinder

Figure 19. Upper Cylinder

© SPX

8. Remove the 6 bridge retaining screws. Detach the bridge assembly carefully, the bridge is lightly spring loaded against the lower cylinder.

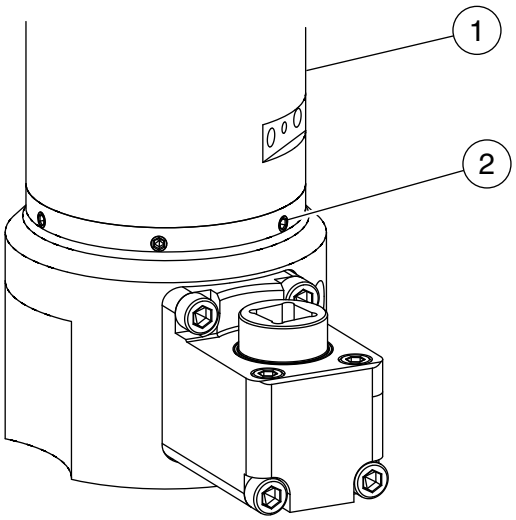

Item	Description
1	Lower Cylinder
2	Bridge Retaining Screws

Figure 20. Bridge Screws

9. Remove the socket setscrew from the surface of the lower reaction nut / puller bar assembly. Unscrew and remove the lower reaction nut, and slide out the puller bar from the opposite side of the lower cylinder.

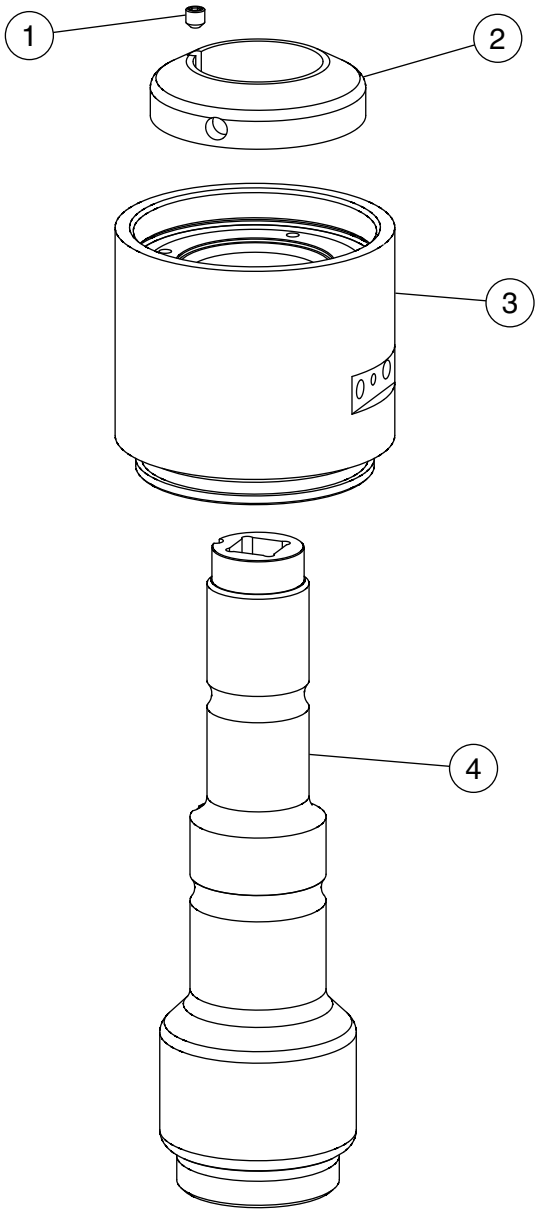

Item	Description
1	Socket Setscrew
2	Lower Reaction Nut
3	Lower Cylinder
4	Puller Bar

Figure 21. Lower Puller Bar

© SPX

PULLER BAR INSPECTION

The Puller Bar is a highly stressed component, and it is critical that it is regularly and carefully inspected. Look out for mechanical damage and wear, if any dents, score marks or cracks are evident, these can be potential stress raisers and could lead to component failure. Pay particular attention to the threads, both internal and external.

If any of the above defects are present, do not re-use the component. Contact SPX Bolting Systems for a replacement Puller Bar Assembly.

10. Remove the pistons from both upper and lower cylinders. Install M4 screws into the threaded holes on the surface of the piston, and pull the piston out of the cylinder bore.
11. With the pistons removed from the cylinder, clean away any dirt or debris, but do not remove the seal. Inspect the inner and outer seal lips for cuts, abrasion and damage, and check the back-up rings for excessive feathering and extrusion.

    Inspect the cylinder bores, looking for signs of wear and scoring. If wear, scoring or damage is evident then the cylinder must be replaced. Verify the cylinder is clean and free from debris. If the seals and cylinder appear in good condition proceed to step (15).

    If the seal and/or back-up rings are not serviceable, the seal can be removed and replaced as follows:

    Single seal type - Using a pair of pliers, grip the outer sealing lip and pull the seal downward and away from the piston. Remove the back-up rings.

    Dual seal type - Using a pair of pliers, grip the lip of the outer seal and pull the seal downward and out of its recess. Remove the back-up rings. Repeat for the inner seal.

    Discard the seals and back-up rings.

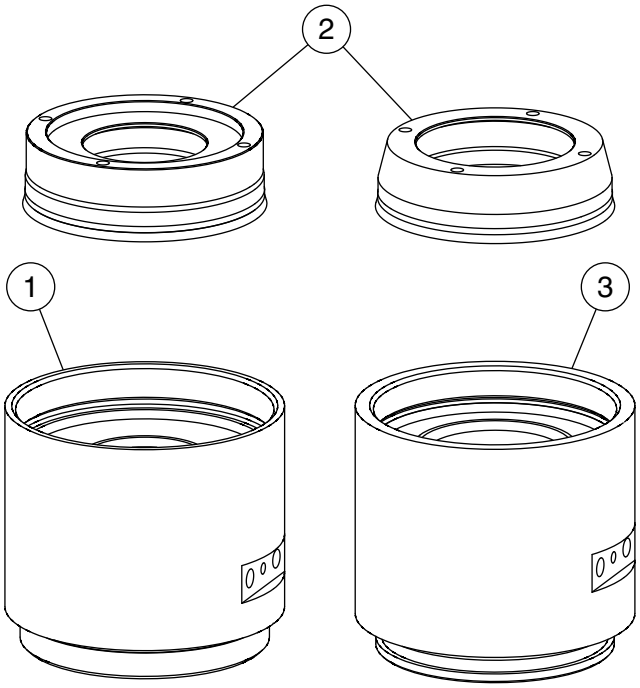

Item	Description
1	Upper Cylinder
2	Pistons
3	Lower Cylinder

Figure 22. Upper and Lower Pistons

12. Inspect the seal grooves in the piston, verify they are free from damage and debris. Inspect the cylinder bores, looking for signs of wear and scoring.
13. Locate the correct seal for the piston and fit the back-up ring onto the seal, positioning the tapering surface of the back-up ring onto the tapering surface of the seal. On single seal types verify both inner and outer back-up rings are fitted.
14. Install the seal and back-up ring assembly into the piston recess, pushing the seal down firmly. The seal should click into place when fully engaged. Visually inspect the seal and piston assembly, looking for ripples and ridges which indicate the seal is not fully engaged.

RE-ASSEMBLY

15. Remove the screws from the pistons
16. Lubricate the seal lips and cylinder bores using clean hydraulic oil or silicone o-ring assembly paste.

© SPX

Form No. 1000588
Rev. 0 February 1, 2012

17. Taking care not to nip the seals, push each piston into it's respective cylinder. The outer seal will enter first followed by the inner seal. A gentle rocking of the piston may help during installation. Push the piston fully into the cylinder.
18. Apply 'Revol R5 Moly Anti-Seize' to the areas of the puller bar as indicated, and insert through the underside of the lower cylinder

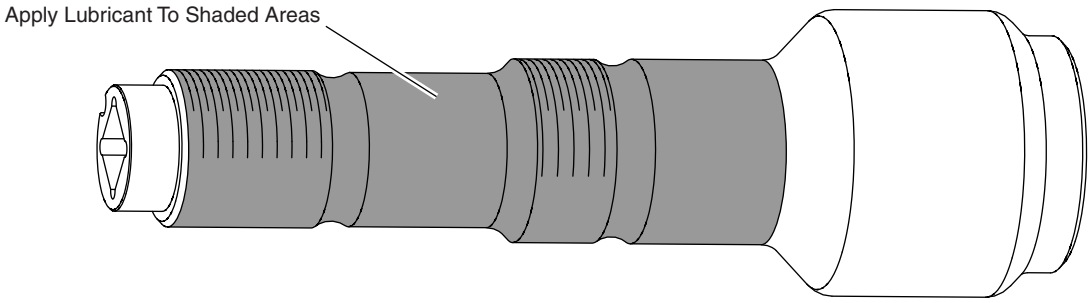

Figure 22. Lubrication

19. Apply 'Revol R5 Moly Anti-Seize' to the lower cylinder piston surface and underside of lower reaction nut. Assemble the lower reaction nut, ensuring that the correct height position is obtained. Surface of lower reaction nut should be aligned with the beginning of first puller bar thread. Install the locking setscrew.

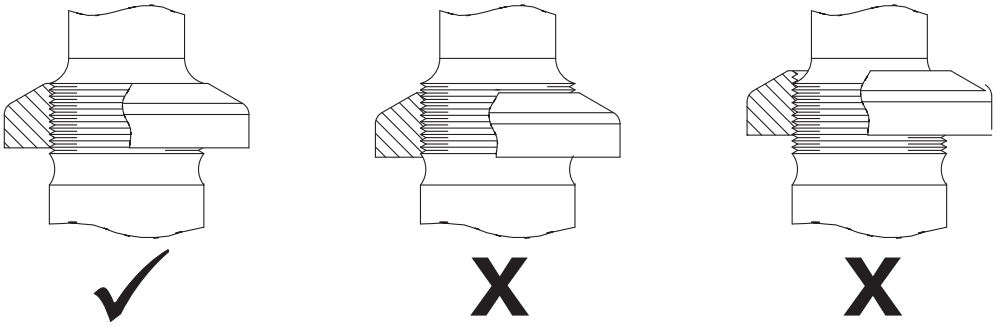

Figure 23. Reaction Nut

20. Lightly lubricate the upper cylinder base threads, and screw into the lower cylinder. Screw the cylinders tightly together until the match marks are perfectly aligned.

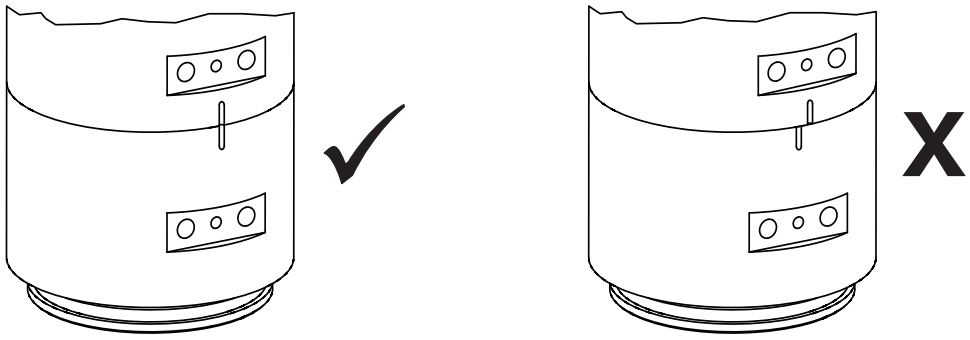

Figure 24. Cylinder Alignment

21. Apply lubricant to the upper cylinder piston surface and underside of upper reaction nut. Assemble the upper reaction nut onto the puller bar until hand tight. Install the locking setscrew.
22. Apply lubricant to the washer surfaces and install the washer.

© SPX

Form No. 1000588
Rev. 0 February 1, 2012

23. Install new port seals to manifold, and smear over a light grease to maintain seals in position. Apply Loctite to the mounting bolt threads and assemble the manifold block to the cylinder assembly. Tighten the screws in a criss-cross pattern to a torque of 10Nm.Lightly lubricate the cap threads, and screw into the upper cylinder. Firmly tighten using a pin type spanner, or a strap wrench.
24. Lay the tensioner on its side, insert a spring pin into each spring, and install the springs (with pins).

NOTE: Springs are assembled, spring pin side first.

25. Apply Loctite to each top plate screw, and attach the top plate.
26. Remove the spring from the bridge assembly and lift out the geared hex rotating disc. Apply lubricant to the gear teeth and upper and lower faces of the hex insert. Re-fit the insert and insert the spring.
27. Attach the bridge assembly and install the 6 retaining setscrews.
28. Once the tensioner is fully assembled, check the following:
    - Free rotation of the puller bar
    - Nut rotator springs freely within the bridge
    - Check gearbox operation
29. Assemble the tensioning tool to an appropriate bolt and test to the maximum working pressure (1350 bar - 19580 psi).

NOTE : Test bolt must be at least Grade 12.9 quality.

WARRANTY

All Bolt Tensioners are supplied under the manufacturers' standard terms and conditions.

All components shall be guaranteed for a period of twelve months from the date of purchase against material defects and workmanship. All components shall be guaranteed for a period of twelve months from the date of purchase against defects arising from normal use with the following exclusions:

- Hydraulic seals and back-up rings
- O-ring seals
- Quick-disconnect couplings
- Labels and decals
- Tommy bars
- Paints and coatings
- Plastic screws
- Springs

END OF LIFE AND DISPOSAL

In accordance with our End of Life Policy, should the product be no longer required for use, it should be returned to SPX Bolting Systems where it shall be disposed of in a safe and environmentally friendly manner.

© SPX

Form No. 1000588
Rev. 0 February 1, 2012

Parts Lists

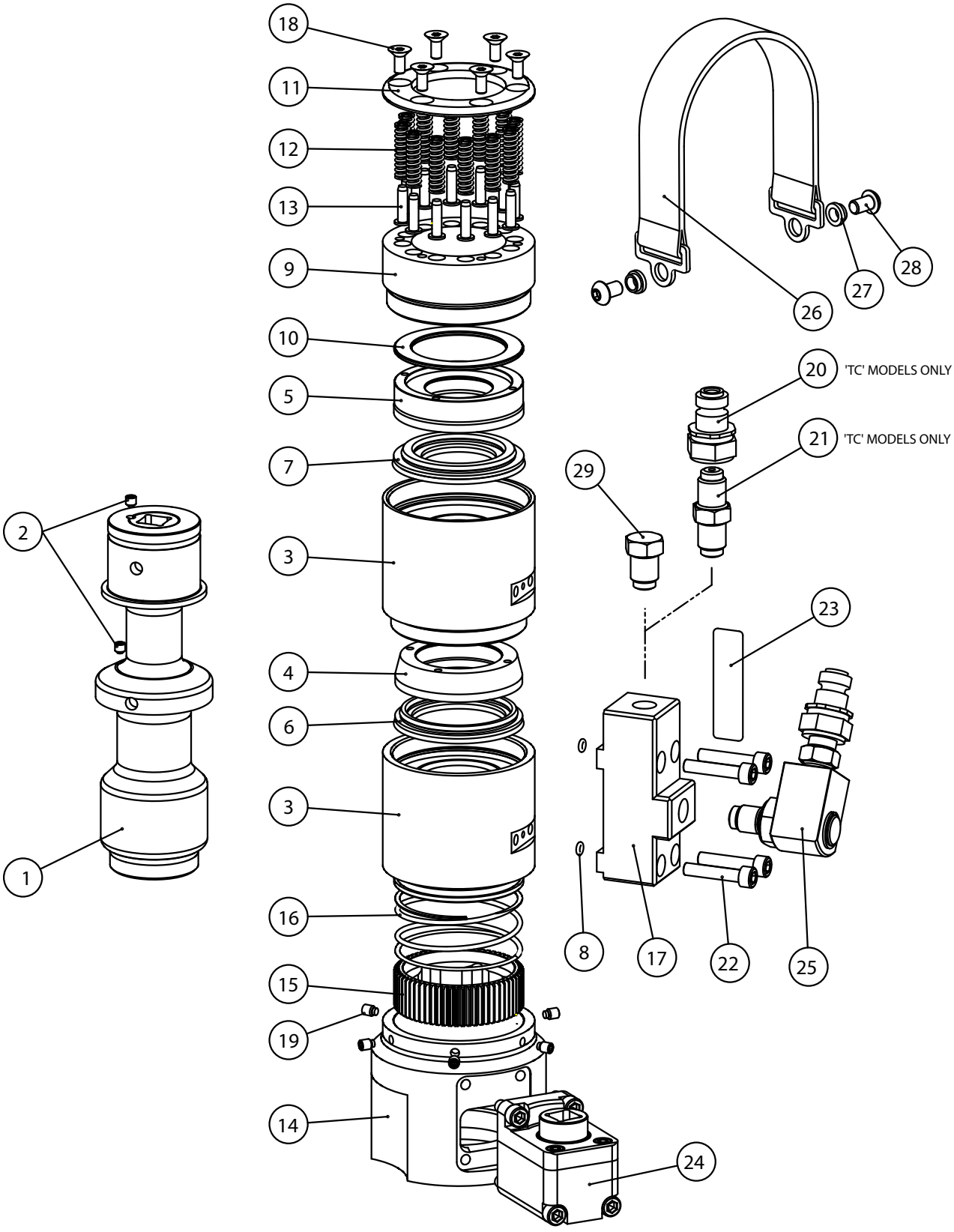

Figure 25. WDD Exploded View

WDD Series Tensioner Parts List

Item No.	Description	Qty	WDD1-M30
1	PULLER BAR ASSEMBLY, WDD	**1**	**WDDAS01MI02**
2	-SCREW	2	**STDFA000054**
3	CYLINDER ASSEMBLY, WDD	1	**WDDAS010001**
4	PISTON, WDD LOWER	1	**WDDPI010001**
5	PISTON, WDD UPPER	1	**WDDPI010002**
-	SEAL KIT, WDD	-	**WDDAS010002**
6	-SEAL, WDD LOWER	1	**WDDSE010001**
7	-SEAL, WDD UPPER	1	**WDDSE010002**
8	-SEAL	2	**STDSE000023**
9	CAP, WDD	1	**WDDCA010001**
10	WASHER, WDD	1	**WDDWA010001**
11	TOP PLATE, WDD	1	**WDDTP010001**
12	SPRING	12	**STDST000001**
13	SPRING PIN	12	**SRTSP000001**
14	BRIDGE, WDD GEARED	1	**WDDBR010001**
15	HEX ROTATING DISC, GEARED	1	**WTGNR01MI00**
16	SPRING	1	**WTGST010001**
17	MANIFOLD, WDD	1	**WDDMA010001**
18	SCREW	6	**STDFA000154**
19	SCREW	6	**STDFA000001**
20	MALE COUPLING ('TC' MODELS ONLY)	1	**STDHC000001**
21	ADAPTOR ('TC' MODELS ONLY)	1	**STDHC000014**
22	SCREW	4	**STDFA000153**
23	DECAL	1	**DFTLA080004**
24	GEARBOX ASSEMBLY	1	**WTGAS000001**
25	1500 BAR SWIVEL ASSEMBLY	1	**HHAMA150005**
26	HANDLE STRAP	1	**WTCHS000001**
27	WASHER	2	**WTCHW00001**
28	SCREW	2	**STDFA000125**
29	BLIND PLUG	1	**STDHC000025**

Item No.	Description	Qty	WDD2-M33
1	PULLER BAR ASSEMBLY, WDD	**1**	**WDDAS02MJ02**
2	-SCREW	2	**STDFA000054**
3	CYLINDER ASSEMBLY, WDD	1	**WDDAS020001**
4	PISTON, WDD LOWER	1	**WDDPI020001**
5	PISTON, WDD UPPER	1	**WDDPI020002**
-	SEAL KIT, WDD	-	**WDDAS020002**
6	-SEAL, WDD LOWER	1	**WDDSE020001**

© SPX

Form No. 1000588
Rev. 0 February 1, 2012

Item No.	Description	Qty	WDD2-M33
7	-SEAL, WDD UPPER	1	**WDDSE020002**
8	-SEAL	2	**STDSE000023**
9	CAP, WDD	1	**WDDCA020001**
10	WASHER, WDD	1	**WDDWA020001**
11	TOP PLATE, WDD	1	**WDDTP020001**
12	SPRING	12	**STDST000001**
13	SPRING PIN	12	**SRTSP000001**
14	BRIDGE, WDD GEARED	1	**WDDBR020001**
15	HEX ROTATING DISC, GEARED	1	**WTGNR02MJ00**
16	SPRING	1	**WTGST020001**
17	MANIFOLD, WDD	1	**WDDMA010001**
18	SCREW	6	**STDFA000154**
19	SCREW	6	**STDFA000001**
20	MALE COUPLING	1	**STDHC000001**
21	ADAPTOR	1	**STDHC000014**
22	SCREW	4	**STDFA000153**
23	DECAL	1	**DFTLA080004**
24	GEARBOX ASSEMBLY	1	**WTGAS000001**
25	1500 BAR SWIVEL ASSEMBLY	1	**HHAMA1500005**
26	HANDLE STRAP	1	**WTCHS000001**
27	WASHER	2	**WTCHW00001**
28	SCREW	2	**STDFA000125**
29	BLIND PLUG	1	**STDHC000025**

Item No.	Description	Qty	WDD3-M36
1	PULLER BAR ASSEMBLY, WDD	**1**	**WDDAS03MK02**
2	-SCREW	2	**STDFA000054**
3	CYLINDER ASSEMBLY, WDD	1	**WDDAS030001**
4	PISTON, WDD LOWER	1	**WDDPI030001**
5	PISTON, WDD UPPER	1	**WDDPI030002**
-	SEAL KIT, WDD	-	**WDDAS030002**
6	-SEAL, WDD LOWER	1	**WDDSE030001**
7	-SEAL, WDD UPPER	1	**WDDSE030002**
8	-SEAL	2	**STDSE000023**
9	CAP, WDD	1	**WDDCA030001**
10	WASHER, WDD	1	**WDDWA030001**
11	TOP PLATE, WDD	1	**WDDTP030001**
12	SPRING	18	**STDST000001**
13	SPRING PIN	18	**SRTSP000001**
14	BRIDGE, WDD GEARED	1	**WDDBR030001**

© SPX

Item No.	Description	Qty	WDD3-M36
15	HEX ROTATING DISC, GEARED	1	**WTGNR03MK00**
16	SPRING	1	**WTGST030001**
17	MANIFOLD, WDD	1	**WDDMA020001**
18	SCREW	6	**STDFA000154**
19	SCREW	6	**STDFA000001**
20	MALE COUPLING	1	**STDHC000001**
21	ADAPTOR	1	**STDHC000014**
22	SCREW	4	**STDFA000153**
23	DECAL	1	**DFTLA150004**
24	GEARBOX ASSEMBLY	1	**WTGAS000001**
25	1500 BAR SWIVEL ASSEMBLY	1	**HHAMA150005**
26	HANDLE STRAP	1	**WTCHS000001**
27	WASHER	2	**WTCHW00001**
28	SCREW	2	**STDFA000125**
29	BLIND PLUG	1	**STDHC000025**

Item No.	Description	Qty	WDD4-M39
1	PULLER BAR ASSEMBLY, WDD	**1**	**WDDAS04ML02**
2	-SCREW	2	**STDFA000054**
3	CYLINDER ASSEMBLY, WDD	1	**WDDAS040001**
4	PISTON, WDD LOWER	1	**WDDPI040001**
5	PISTON, WDD UPPER	1	**WDDPI040002**
-	SEAL KIT, WDD	-	**WDDAS040002**
6	-SEAL, WDD LOWER	1	**WDDSE040001**
7	-SEAL, WDD UPPER	1	**WDDSE040002**
8	-SEAL	2	**STDSE000023**
9	CAP, WDD	1	**WDDCA040001**
10	WASHER, WDD	1	**WDDWA040001**
11	TOP PLATE, WDD	1	**WDDTP040001**
12	SPRING	18	**STDST000001**
13	SPRING PIN	18	**SRTSP000001**
14	BRIDGE, WDD GEARED	1	**WDDBR040001**
15	HEX ROTATING DISC, GEARED	1	**WTGNR04ML00**
16	SPRING	1	**WTGST040001**
17	MANIFOLD, WDD	1	**WDDMA020001**
18	SCREW	6	**STDFA000154**
19	SCREW	6	**STDFA000001**
20	MALE COUPLING	1	**STDHC000001**
21	ADAPTOR	1	**STDHC000014**
22	SCREW	4	**STDFA000153**

© SPX

Form No. 1000588
Rev. 0 February 1, 2012

Parts Lists continued

Item No.	Description	Qty	WDD4-M39
23	DECAL	1	**DFTLA150004**
24	GEARBOX ASSEMBLY	1	**WTGAS000001**
25	1500 BAR SWIVEL ASSEMBLY	1	**HHAMA150005**
26	HANDLE STRAP	1	**WTCHS000001**
27	WASHER	2	**WTCHW00001**
28	SCREW	2	**STDFA000125**
29	BLIND PLUG	1	**STDHC000025**

Item No.	Description	Qty	WDD5-M42
1	PULLER BAR ASSEMBLY, WDD	**1**	**WDDAS05MM02**
2	-SCREW	2	**STDFA000054**
3	CYLINDER ASSEMBLY, WDD	1	**WDDAS050001**
4	PISTON, WDD LOWER	1	**WDDPI050001**
5	PISTON, WDD UPPER	1	**WDDPI050002**
-	SEAL KIT, WDD	-	**WDDAS050002**
6	-SEAL, WDD LOWER	1	**WDDSE050001**
7	-SEAL, WDD UPPER	1	**WDDSE050002**
8	-SEAL	2	**STDSE000023**
9	CAP, WDD	1	**WDDCA050001**
10	WASHER, WDD	1	**WDDWA050001**
11	TOP PLATE, WDD	1	**WDDTP050001**
12	SPRING	18	**STDST000001**
13	SPRING PIN	18	**SRTSP000001**
14	BRIDGE, WDD GEARED	1	**WDDBR050001**
15	HEX ROTATING DISC, GEARED	1	**WTGNR05MM00**
16	SPRING	1	**WTGST050001**
17	MANIFOLD, WDD	1	**WDDMA020001**
18	SCREW	6	**STDFA000154**
19	SCREW	6	**STDFA000001**
20	MALE COUPLING	1	**STDHC000001**
21	ADAPTOR	1	**STDHC000014**
22	SCREW	4	**STDFA000153**
23	DECAL	1	**DFTLA150004**
24	GEARBOX ASSEMBLY	1	**WTGAS000001**
25	1500 BAR SWIVEL ASSEMBLY	1	**HHAMA150005**
26	HANDLE STRAP	1	**WTCHS000001**
27	WASHER	2	**WTCHW00001**
28	SCREW	2	**STDFA000125**
29	BLIND PLUG	1	**STDHC000025**

© SPX

Form No. 1000588
Rev. 0 February 1, 2012

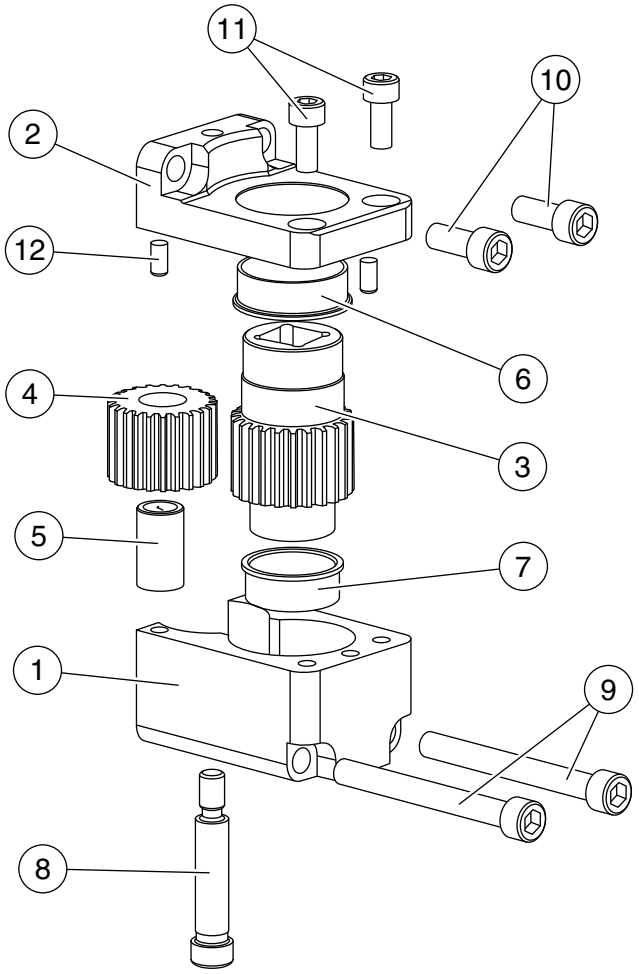

Figure 26. WDD Gearbox Exploded View

Tensioner Gearbox Assembly Parts List

Item No.	Description	Qty	WTGAS000001
1	HOUSING, TENSIONER GEARBOX	**1**	**WTGHG000001**
2	TOP PLATE, TENSIONER G'BOX	1	**WTGTP000001**
3	DRIVE GEAR, TENSIONER G'BOX	1	**WTGDG000001**
4	IDLER GEAR, TENSIONER G'BOX	1	**WTGIG000001**
5	BEARING, TENSIONER G'BOX IDLER	1	**WTGIB000001**
6	BEARING, TENSIONER G'BOX TOP	1	**WTGTB000001**
7	BEARING, TENSIONER G'BOX HOUSING	1	**WTGHB000001**
8	SCREW	1	**MODFA000119**
9	SCREW	2	**STDFA000120**
10	SCREW	2	**STDFA000030**
11	SCREW	2	**STDFA000026**
12	DOWEL PIN	3	**STDST000108**

© SPX

Form No. 1000588
Rev. 0 February 1, 2012

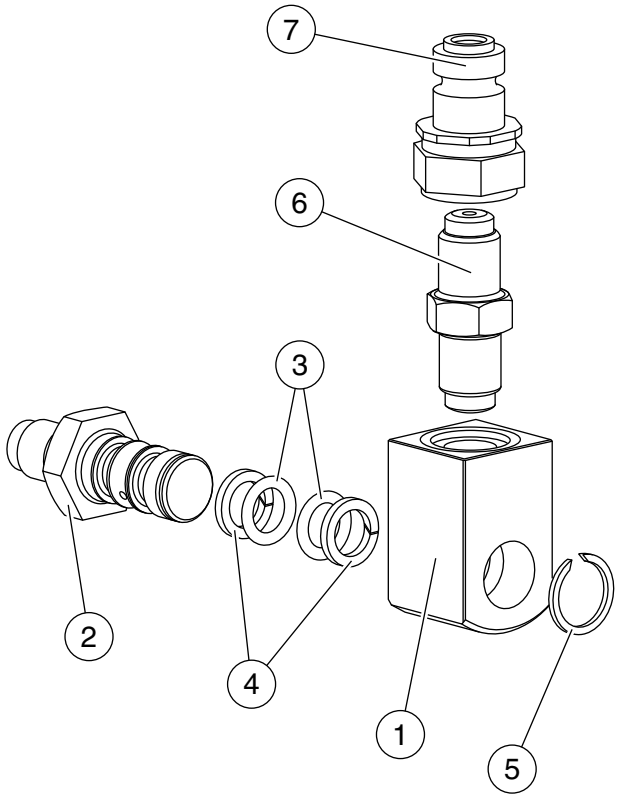

Figure 27. WDD Swivel Exploded View

1500 Bar Swivel Assembly Parts List

Item No.	Description	Qty	HHAMA150005
1	SWIVEL BOLT (1500 BAR)	**1**	**INTHC000012**
2	SWIVEL BLOCK (1500 BAR)	1	**INTHC000011**
3	O-RING	2	**STDSE000077**
4	BACK-UP RING	2	**STDSE000078**
5	CLIP	1	**STDRC000065**
6	ADAPTOR	1	**STDHC000014**
7	MALE COUPLING	1	**STDHC000001**

© SPX

Form No. 1000588
Rev. 0 February 1, 2012

Declaration of Incorporation

SPX Bolting Systems
Unit 4, Wansbeck Business Park
Rotary Parkway
Ashington
Northumberland NE63 8QW
Tel: +44 (0) 1670 850580
Fax: +44 (0) 1670 850655
spxboltingsystems.com

We declare that this product complies with the appropriate ESR's of the following directives,

- 2006/42/EC

Where appropriate the requirements of the following standards have been invoked,

- EN 292/2/91

Product description: HYDRAULIC BOLT TENSIONER

Model type: WDD1, WDD2, WDD3, WDD4, WDD5 HYDRAULIC BOLT TENSIONERS

In addition, the goods supplied have been classified as Category 1 (Mod A) according to the EC Pressure Equipment Directive (PED) 97/23/EC.

SPX Bolting Systems is the person authorised to compile the technical file.

SPX Bolting Systems, the manufacturer / supplier, undertake to transmit and / or make available in response to reasoned request, technical file details and other relative information to EEC National Authorities, in electronic or hard copy format

Installation and operation of this equipment must be in accordance with the installation and operating instructions provided. This product must not be put into service until the machinery into which it is incorporated has been declared in conformity with the provisions of the above directives.

The Company Directors are the equally responsible persons. The person named below is empowered to act as signatory on behalf of the Company Directors

Signed: D. Campbell

Printed: DAVID CAMPBELL Date: 24th November 2011

© SPX

Form No. 1000588
Rev. 0 February 1, 2012